	A (mm)	B (mm)
5’3” x 4’4”	1606	1348
5’3” x 6’4”		1968
5’3” x 8’4”		2588
5’3” x 10’5”		3208
5’3” x 12’5”		3828

Model

HE-GLO

5’ Wide

ASSEMBLY INSTRUCTIONS

ISSUE 2

GB

Thank you for purchasing your new Hercules greenhouse. We recommend you familiarise yourself with the instructions and read all safety information before you commence assembly. This instruction manual is also available online at www.greenhousepeople.co.uk in our technical help section should you need to reprint it. Should you require any additional advice you can always call us on 01782 385408.

These instructions are divided into sections; **B**-base, **partlists**,**1**-sides, **2**-front gable, **3**-rear, **4**-joining the four sides together, **5**-roof, **6**-vent, **7**-door, **8**-glazing, **9**-louvre assembly, **10**-vent attachment, **11**-door attachment, **12** anchoring down, **back cover**-packing list. If you need to contact us for assistance please refer to the relevant section/s or the page numbers bottom middle.

Safety Warning

- Glass and aluminium can potentially cause injury. Please ensure you wear protective goggles, gloves, headgear and suitable footwear when assembling and glazing the building.
- Please remember that glass is fragile and should be handled with extreme care. Always clear up and dispose of any breakages immediately.
- Do not assemble the greenhouse in high winds.
- For safety reasons and ease of assembly, we recommend that this greenhouse is assembled by a minimum of two people.
- Please clear all lying snow from the greenhouse roof as it can cause the roof to buckle or collapse.

Site Preparation

- When selecting a site for your greenhouse, it is vital that you choose as flat and level an area as possible.
- A concrete or slabbed base will provide the most solid foundation for your greenhouse.
- IMPORTANT: Do **not** fix your building down until the building is fully assembled, including glazing.
- Avoid placing your greenhouse under trees or in other vulnerable locations.
- To minimise the risk of wind damage, try to select as sheltered a site as possible, e.g. beside a hedgerow or garden fence.

Additional Considerations

- Please bear in mind that assembling your greenhouse can be time consuming. You may need to spread the construction over two or more days. We recommend that you avoid leaving the building partially glazed. If you ever have to leave your greenhouse half assembled and not anchored down, weigh it down with slabs or bags of sand to stop the wind moving it.
- You will find it helpful to prepare a large, clean and clear area in which to work in. A garage floor or flat lawn area is ideal.
- If you have arranged for someone to install your greenhouse for you, please check that all components are included. Most parts are numbered and can be identified by a stamped number (without the 'SY', 'HE', 'CL') or removable label. Alternatively, the components can be identified by lengths detailed in the packing list (see diagram below). Please also note that **NOT** all parts for a specific area will be packed together, i.e. door related components are packed together and some are used in main frame construction.
- Anchoring down your greenhouse should be the final stage of construction (including glazing).
- Once installed your greenhouse requires little maintenance, but to maintain the smooth running of your door(s) WD40 or similar can be applied to the door wheels and lower door guides.

Guarantee

- Your new Hercules greenhouse is guaranteed for 10 years against faulty manufacture of the framework. This does not include glazing, moving parts, accidental damage or wind damage.

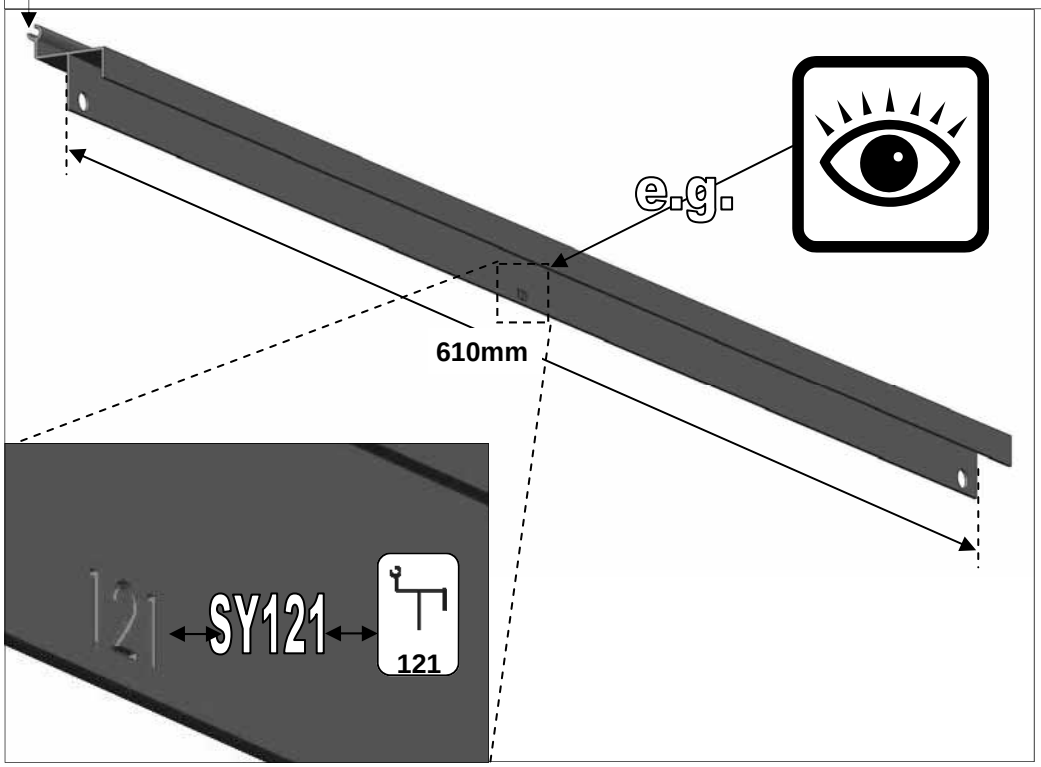

KEY SYMBOL	KEY DESCRIPTION
	EXTERNAL VIEW
	INTERNAL VIEW
	THINK
	THIS SECTION RELATES TO ANOTHER (e.g. 1 to 5)
	CORRECT
	DO NOT FIX DOWN!
	TWIST TO LOCK
	TIGHTEN
	DO NOT WET!
	CUT TO LENGTH

	A (mm)	B (mm)
5’3” x 4’4”	1606	1348
5’3” x 6’4”		1968
5’3” x 8’4”		2588
5’3” x 10’5”		3208
5’3” x 12’5”		3828

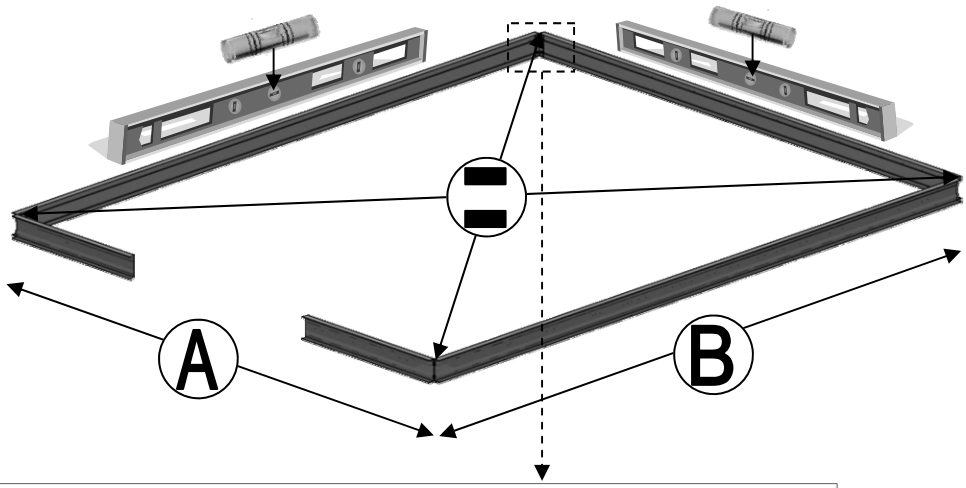

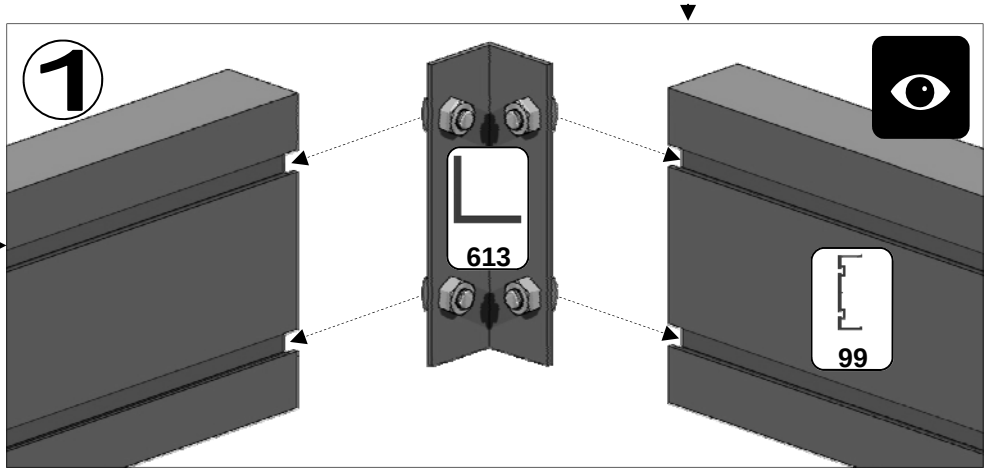

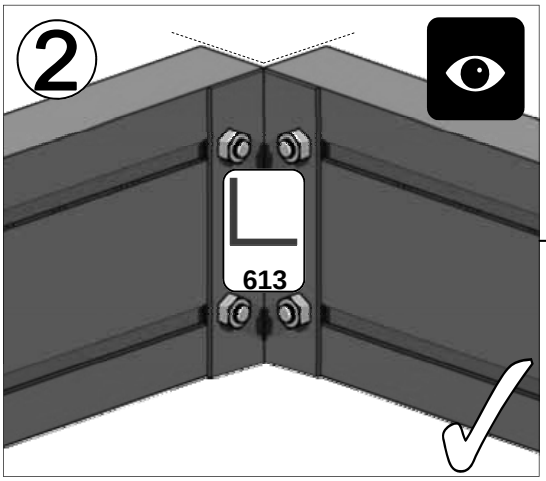

OPTION 1: base on slabs

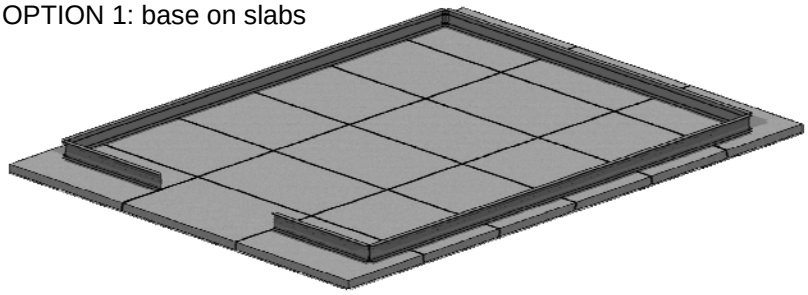

OPTION 2: base on concrete

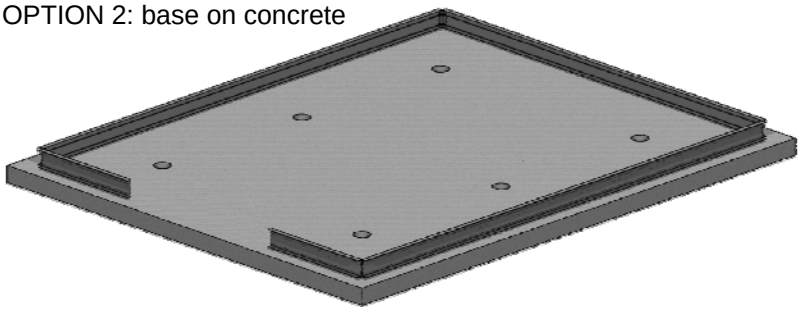

Part No.	Section	Size (mm)	5 4	5 6	5 8	5 10	5 12
SY004		3720					2
SY009		3100				2	
SY015		2480			2		
SY029		1860		2			
SY099		1548	1				
SY097		1240	2				
SY617		468	2				
SY613		100	4				

B

5 - GLOUCESTER

Page Ref	Part No.	Section	Size (mm)	5 4	5 6	5 8	5 10	5 12
1	SY001		3720					2
	SY005		3100				2	
	SY017		2480			2		
	SY025		1860		2			
	SY055		1240	2				
	SY003		3720					2
	SY008		3100				2	
	SY014		2480			2		
	SY027		1860		2			
	SY058		1240	2				
	SY021		1586	2	4			
	SY047		1504	2	4	6	8	10

Page Ref	Part No.	Section	Size (mm)	5 4	5 6	5 8	5 10	5 12
2 + 3	SY618		482	2				
	SY170		1836	2				
	SY171		1836	2				
	SY174		1527	4				
	SY179		916	2				
	SY180		916	2				
	SY076		1504	2				
	SY077		1504	2				
	SY181		460	2				
	SY182		460	2				
	SY175		1526	1				
	SY172		1548	1				
	SY176		1526	1				

Page Ref	Part No.	Section	Size (mm)	5 4	5 6	5 8	5 10	5 12
2 + 3	SY201			2				
	SY200			4				
	SY612		615	1				
	SY616			1				
	SY615			1				
5	SY002		3720					1
	SY006		3100				1	
	SY012		2480			1		
	SY026		1860		1			
	SY057		1240	1				
	SY178		925	2	4	6	8	10
	SY177		1049	2	4			
	SY085		622 /	1				
	SY093		636		1	2	3	4
	CL 1046		375	1	2	3	4	5
6	SY121		619	1	2	3	4	
	SY123		612	1	2	3	4	
	SY124		610	2	4	6	8	
	SY STAY			1	2	3	4	
	SY PIN			2	4	6	8	
	SY-BOLM4X10 SYNUTM4			6	12	18	24	
	SY-BOLM6 X22			2	4	6	8	

5 - GLOUCESTER

Page Ref	Part No.	Section	Size (mm)	5 4	5 6	5 8	5 10	5 12
7	SY651 (HE633+ SKID)		306	2				
	SY650 (HE633+ WHEELS)		306	2				
	SY634		306	2				
	SY630		1730	2				
	SY652 (HE631+ SKID)		1730	1				
	SY653		1730	1				
	HE384		112	2				
	SY629		795	8				
	HE571		3800	1				
	HE583		19	24				

Page Ref	Part No.	Section	Size (mm)	5 4	5 6	5 8	5 10	5 12
8	SYBC (C/W) 1210		1210 PLASTIC	12	16	20	24	28
	SYBC (C/W) 1500		1500 PLASTIC	12	16	20	24	28
	SYBC (C/W) 2000		2000 PLASTIC	6				
	SYZ-CLIP		N/A	8	12	16	20	24
	SY-FOAM		15000 FOAM	4 roll	4 roll	5 roll	6 roll	6 roll

Page Ref	Part No.	Section	Size (mm)	5 4	5 6	5 8	5 10	5 12
11	HE400		N/A	2				
	HE560		N/A	2				
	HE374		1320	1				
	HE402		1320	1				
	HE404		N/A	2				
	SY627		612	1				
	SY614		574	1				
	HE300		N/A	2				
	02 -1825		SCREW	2				

Page Ref	Part No.	Section	Size (mm)	5 4	5 6	5 8	5 10	5 12
	SYBOL M6X11		M6 BOLT 10mm	103	119	131	145	155
	SYBOL M6X15		M6 BOLT 15mm	8				
	SYNUT M6		M6 NUT	132	147	159	173	183
	SYBOL M6X11 CROP		M6 CROP	21	20	20	20	20

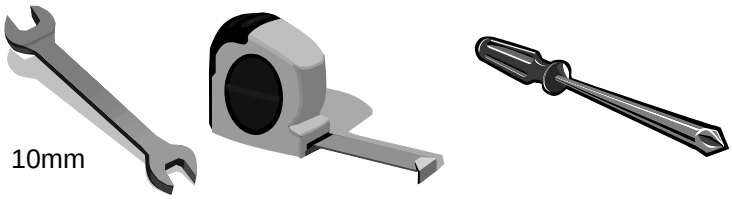

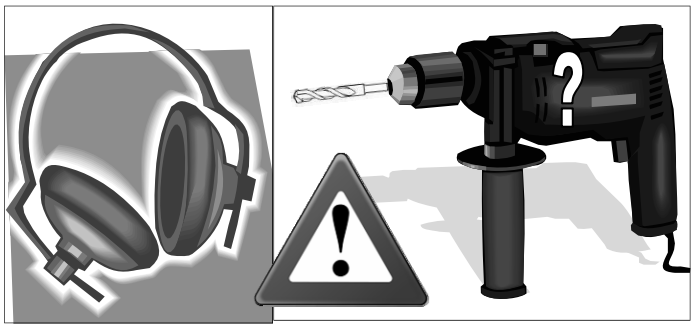

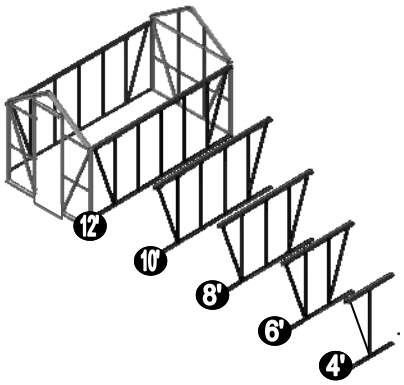

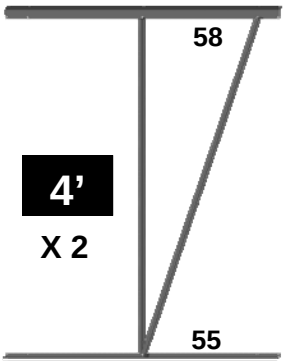

Part No	mm	Quantity
58	1240	2
47	1504	2
55	1240	2
21	1586	2
M6		6
M6		6

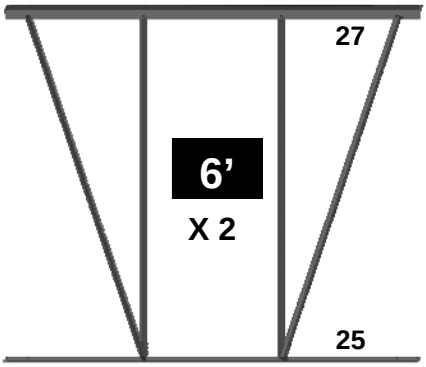

Part No	mm	Quantity
27	1860	2
47	1504	4
25	1860	2
21	1586	4
M6		12
M6		12

e.g. 1

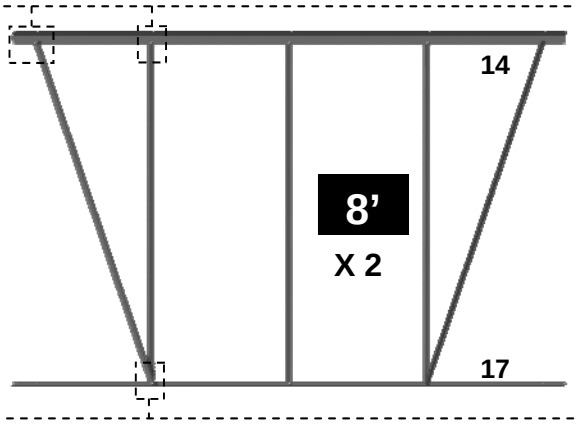

Part No	mm	Quantity
14	2480	2
47	1504	6
17	2480	2
21	1586	4
M6		16
M6		16

e.g. 2

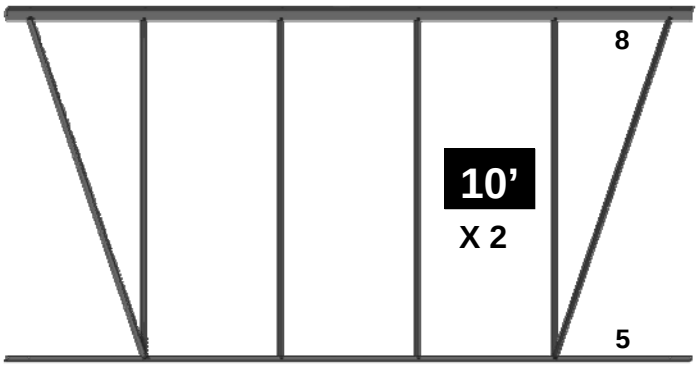

Part No	mm	Quantity
8	3100	2
47	1504	8
5	3100	2
21	1586	4
M6		20
M6		20

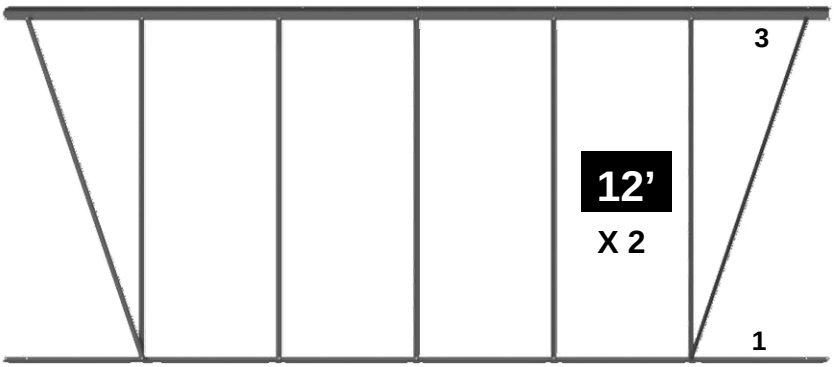

Part No	mm	Quantity
3	3720	2
47	1504	10
1	3720	2
21	1586	4
M6		24
M6		24

1

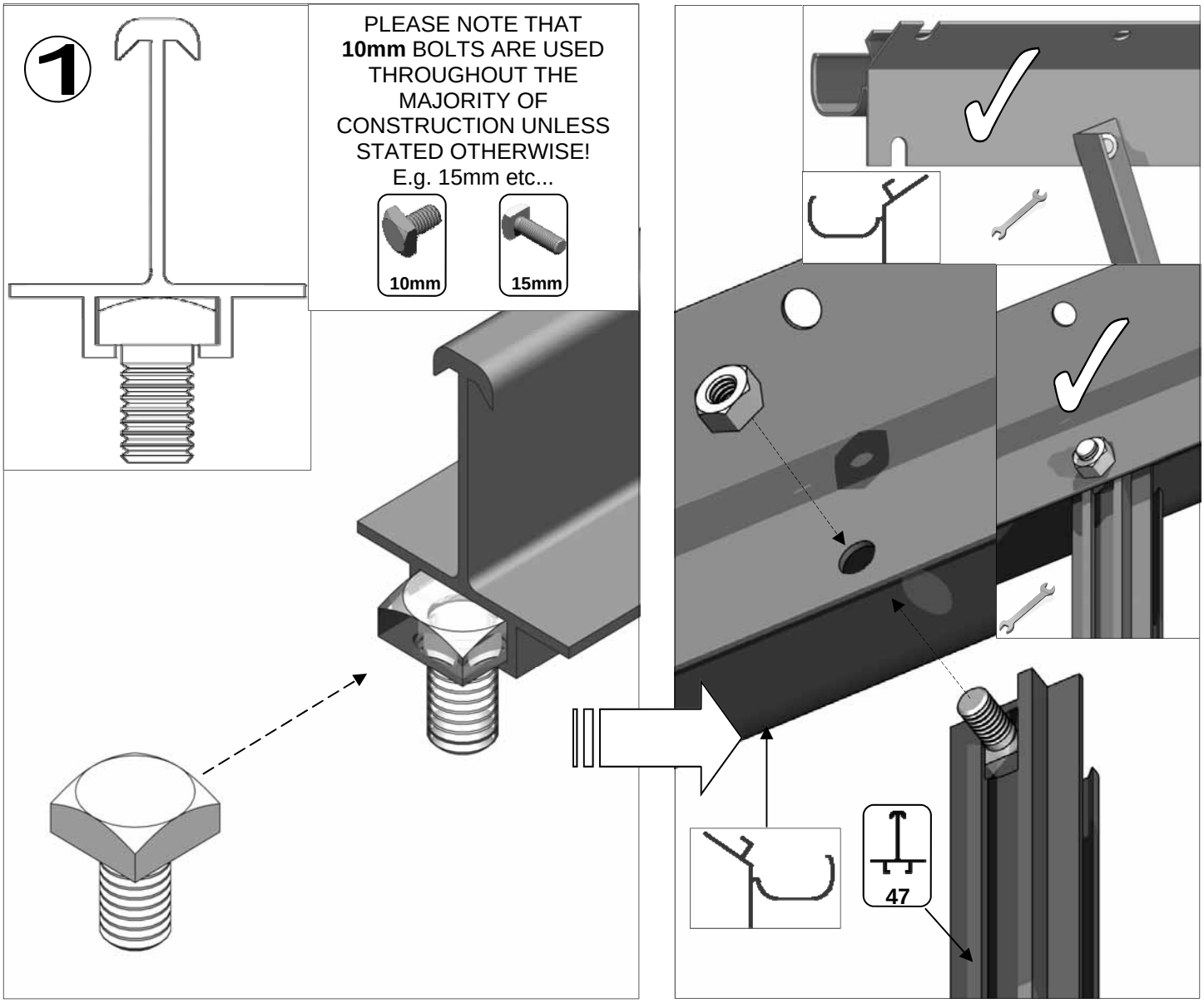
1
PLEASE NOTE THAT
10mm BOLTS ARE USED
THROUGHOUT THE
MAJORITY OF
CONSTRUCTION UNLESS
STATED OTHERWISE!
E.g. 15mm etc...
10mm
15mm
47

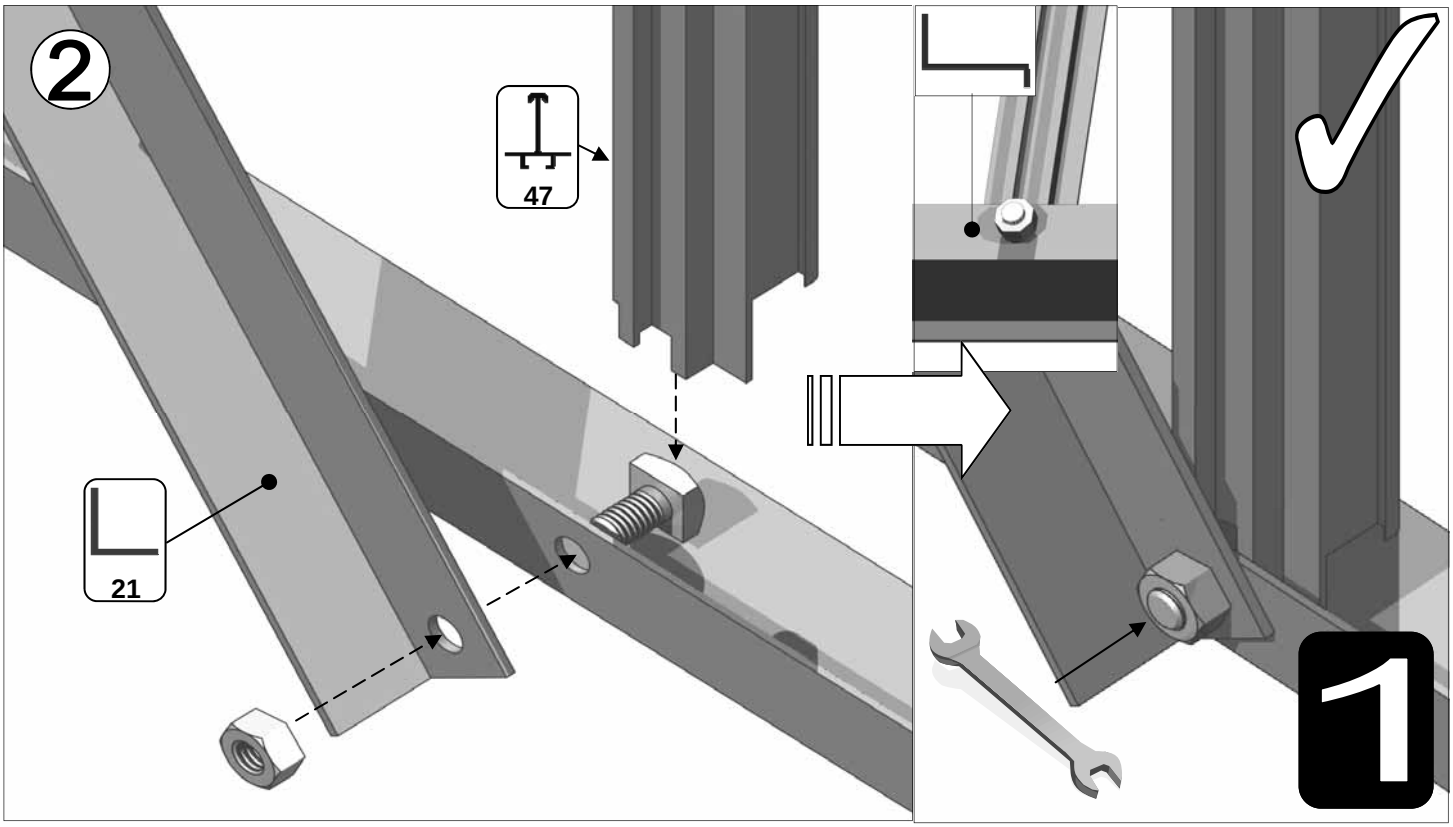
2
47
21
1

Part No	mm	Quantity
76	1504	1
77	1504	1
170	1836	1
171	1836	1
174	1527	2
179	916	1
180	916	1
181	460	2

Part No	mm	Quantity
182	460	2
618	482	2
612	615	1
615	n/a	1
616	n/a	1

	10mm	28
	15mm	8
	M6	34

PARTS IN BETA DOOR BOX

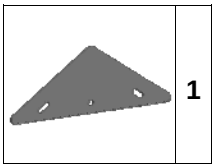

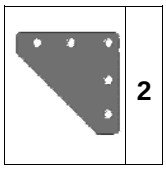

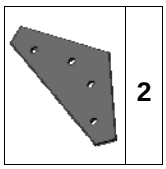

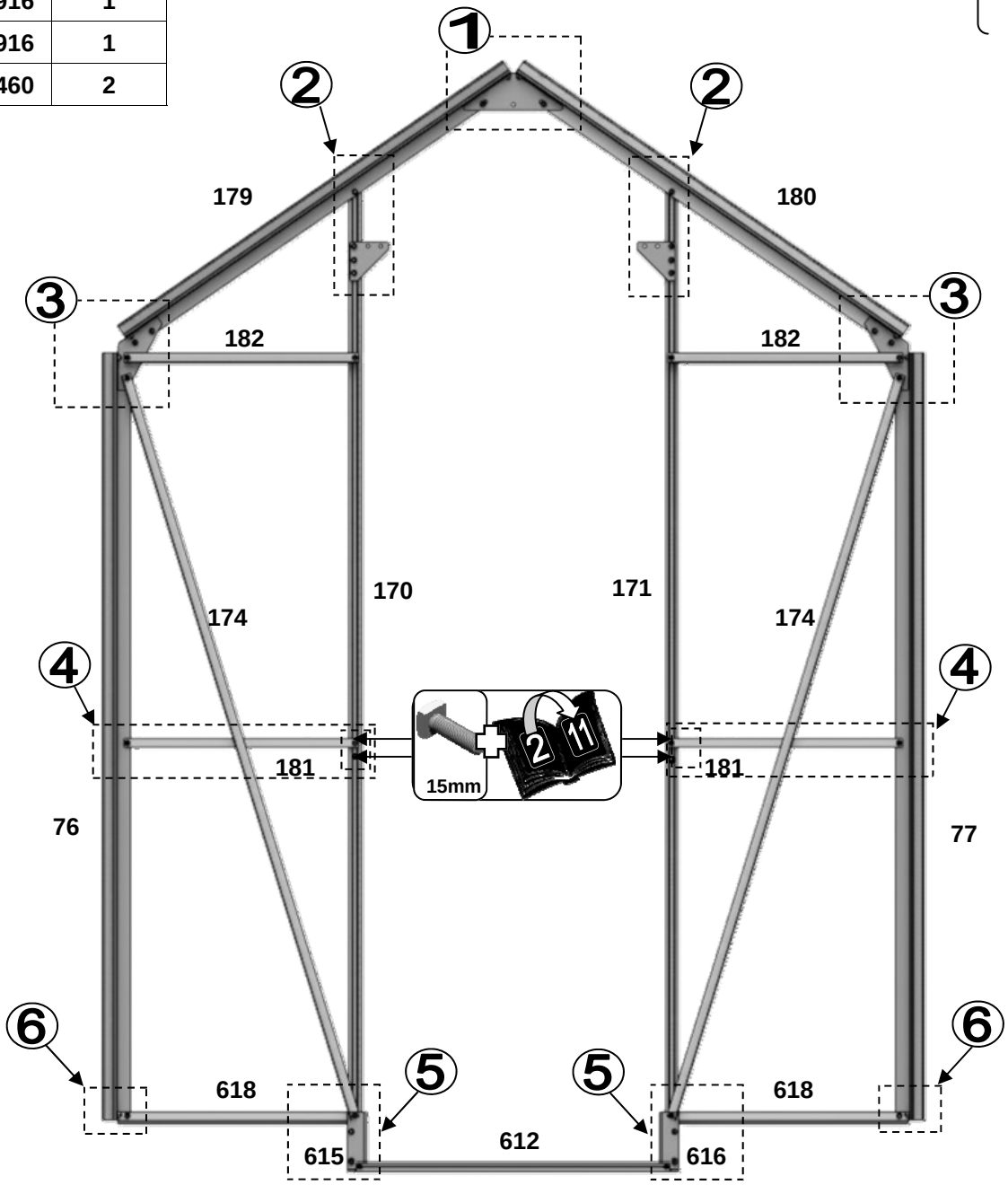

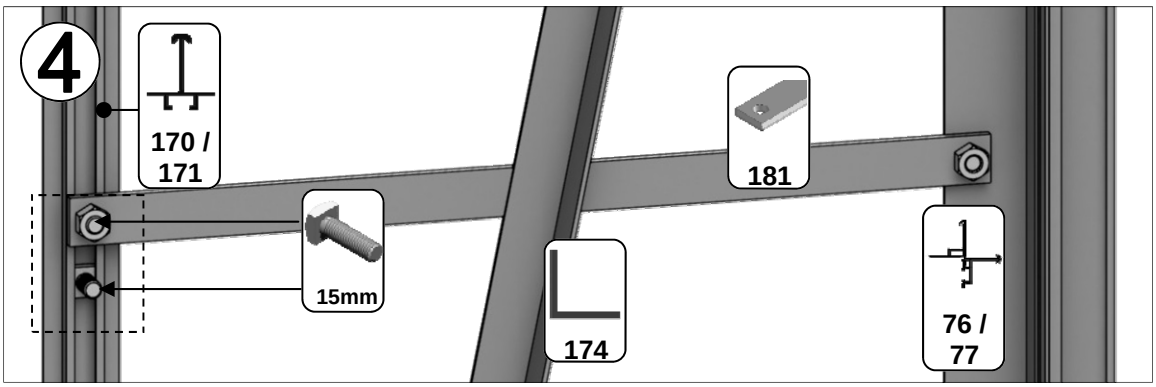

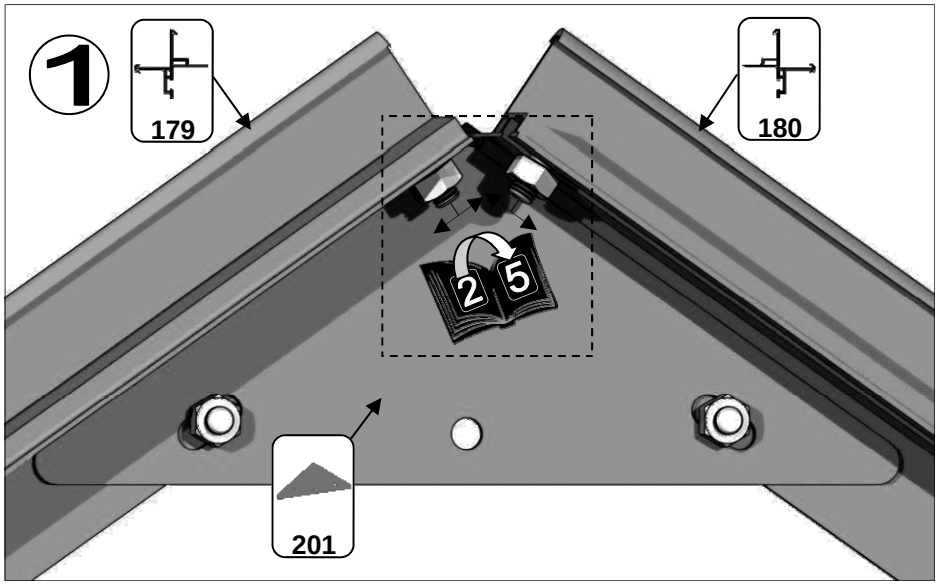
1
179
180
2
5
201

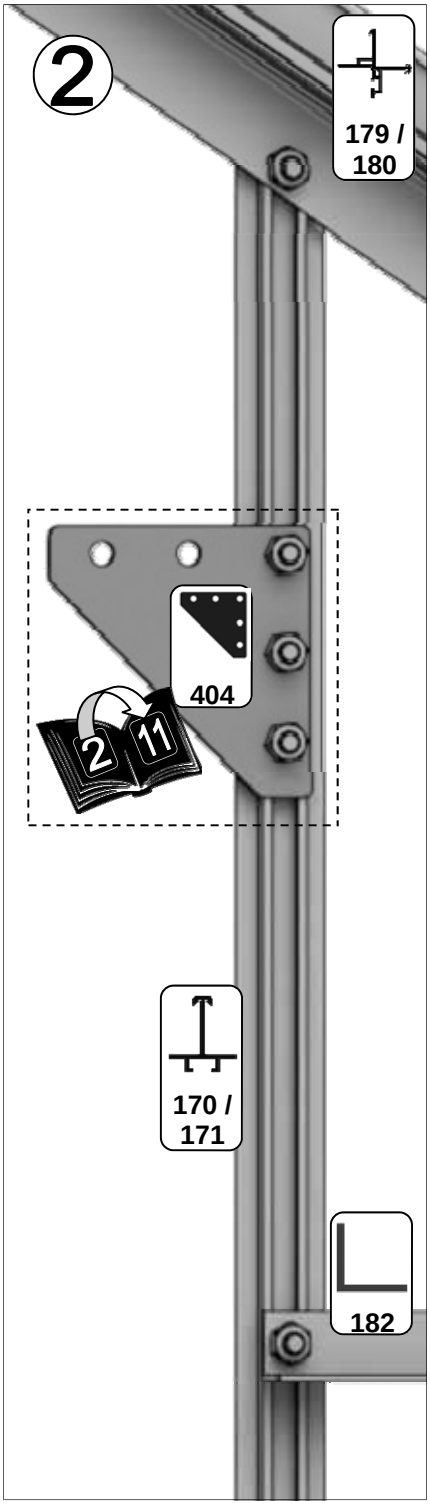
2
179 /
180
404
2
11
170 /
171
182

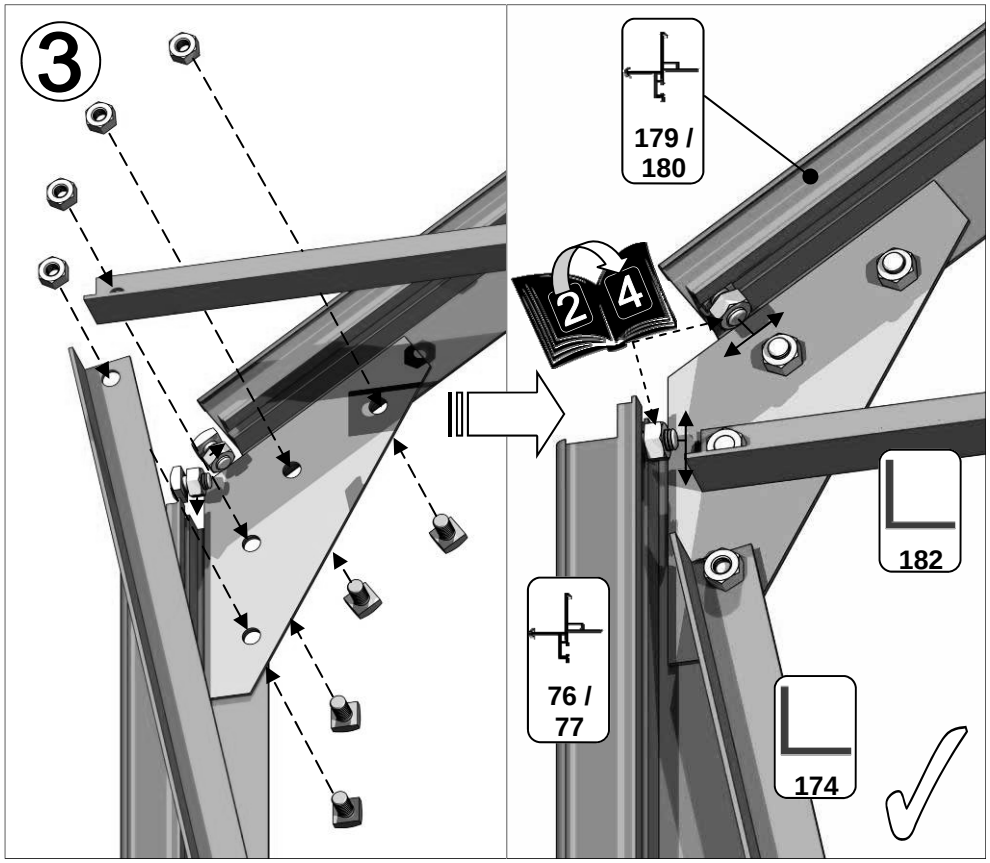
3
179 /
180
2
4
182
76 /
77
174

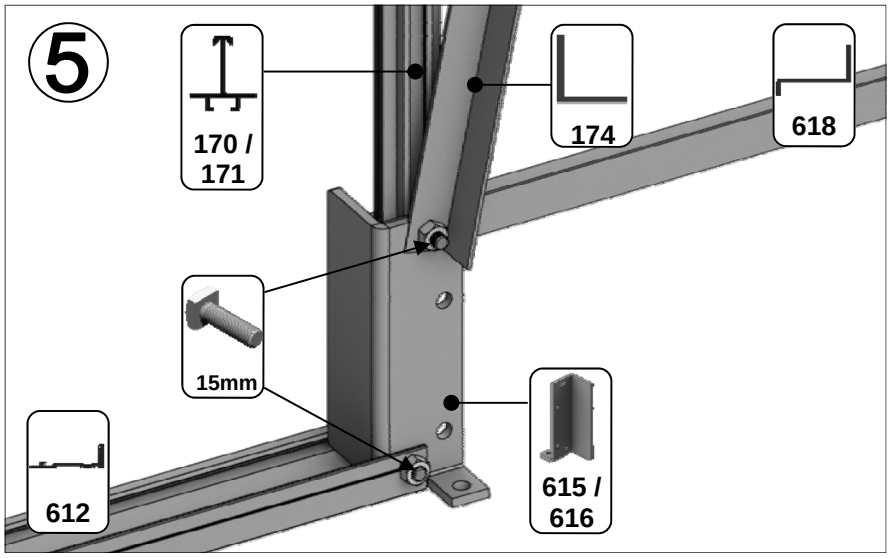
5
170 /
171
174
618
15mm
612
615 /
616

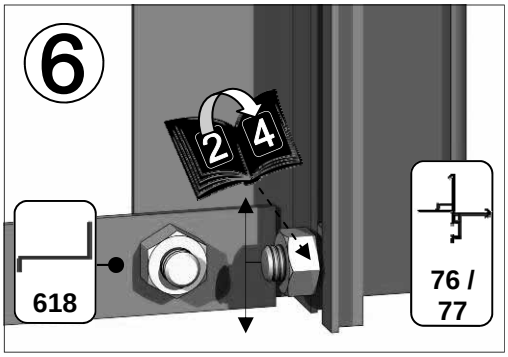
6
2
4
618
76 /
77

Part No	mm	Quantity
76	1504	1
77	1504	1
170	1836	1
171	1836	1
172	1548	1

Part No	mm	Quantity
174	1527	2
175	1526	1
176	1526	1
179	916	1
180	916	1

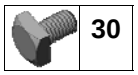
30

M6

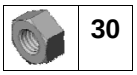
30

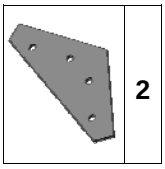
2

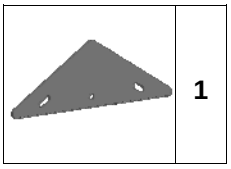
1

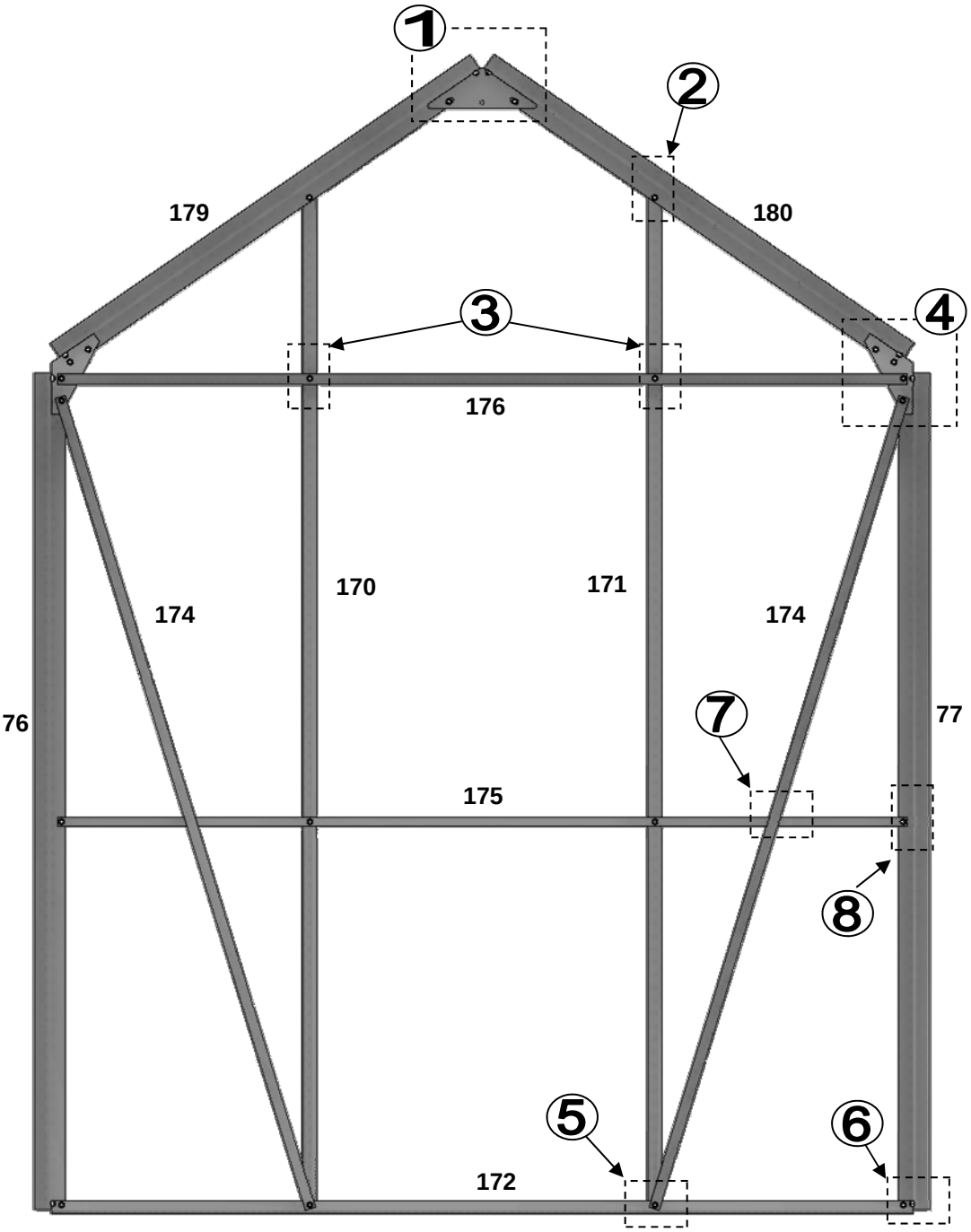

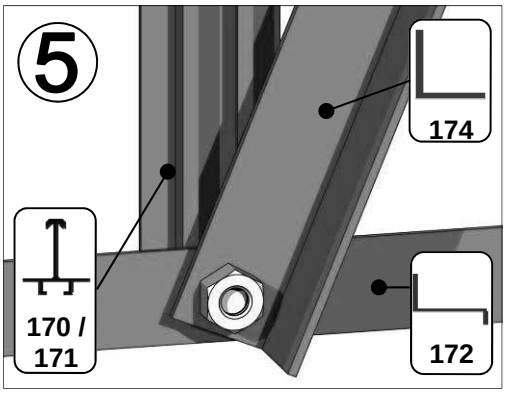

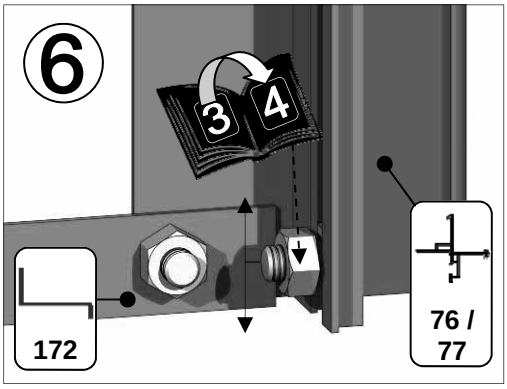

3

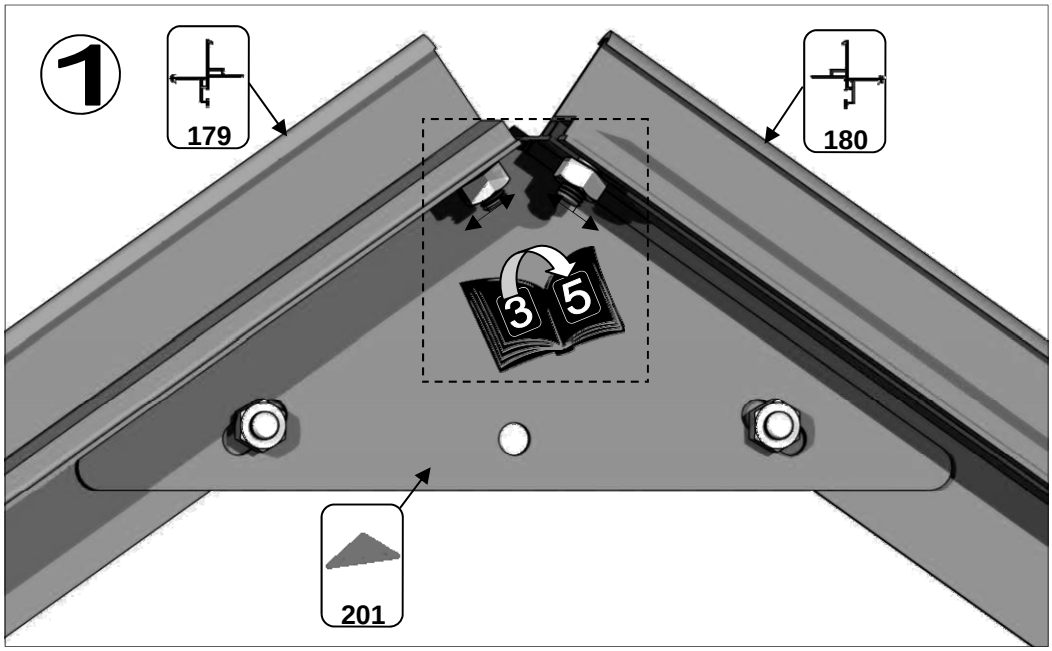
1
179
180
3
5
201

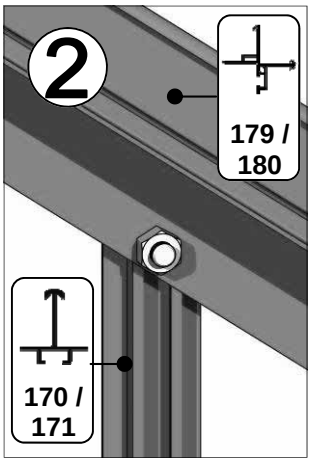
2
179 /
180
170 /
171

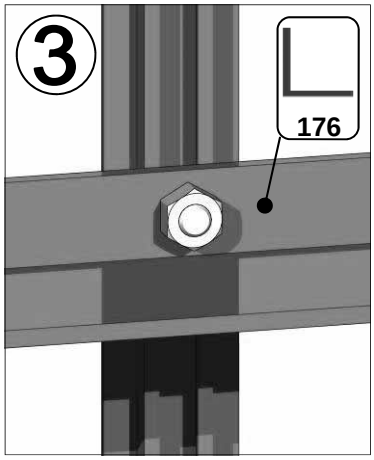
3
176

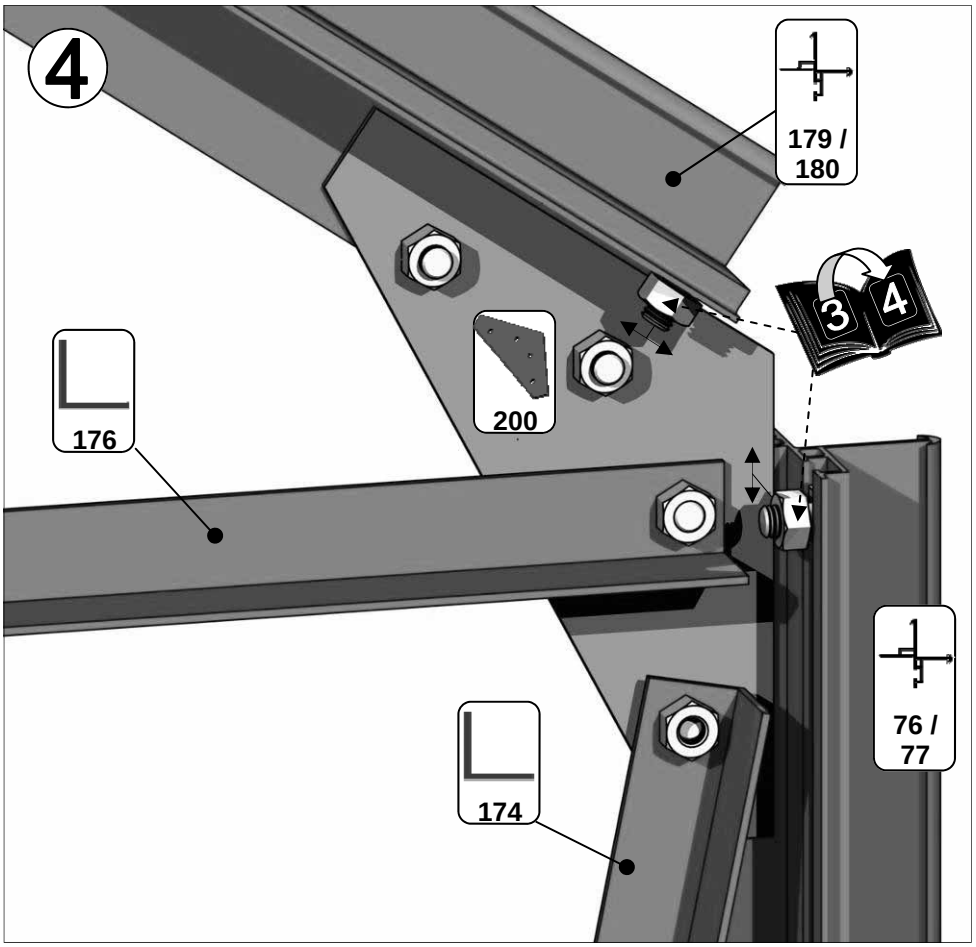
4
179 /
180
3
4
200
176
76 /
77
174

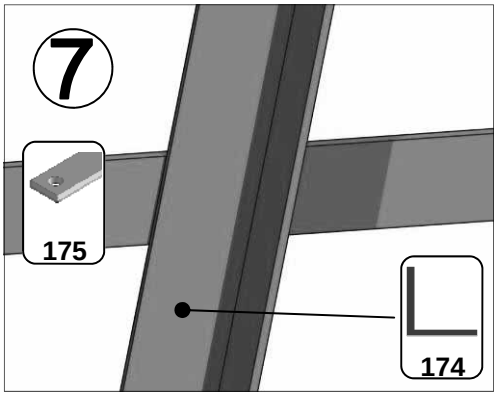
7
175
174

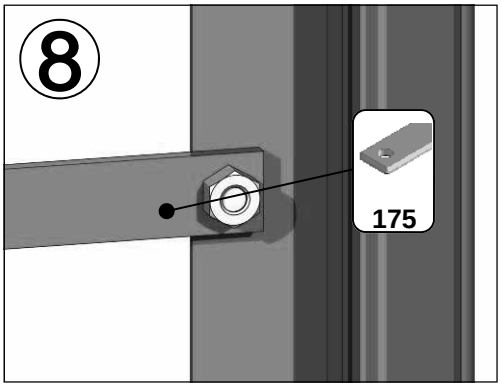
8
175

3

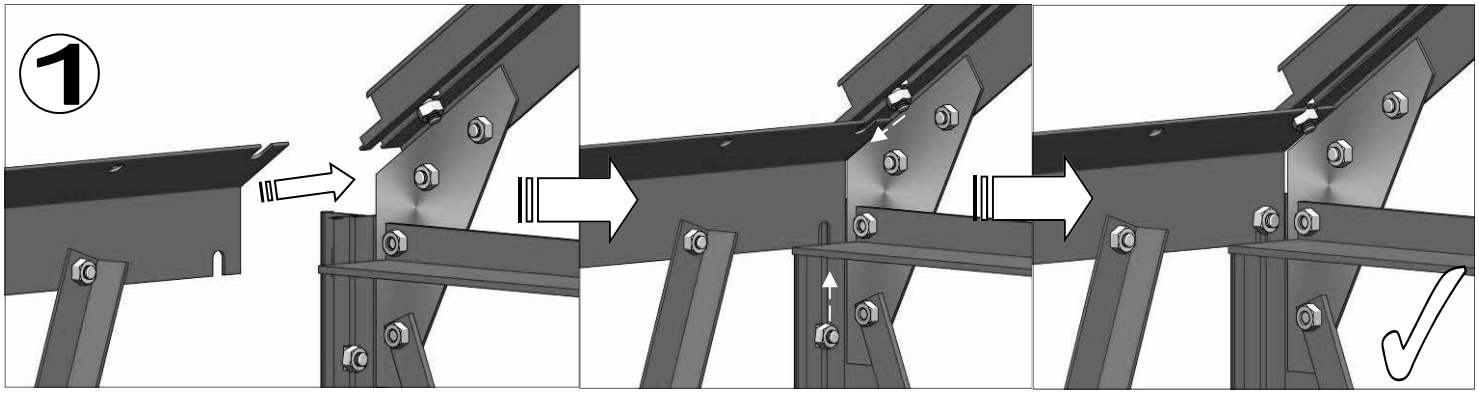

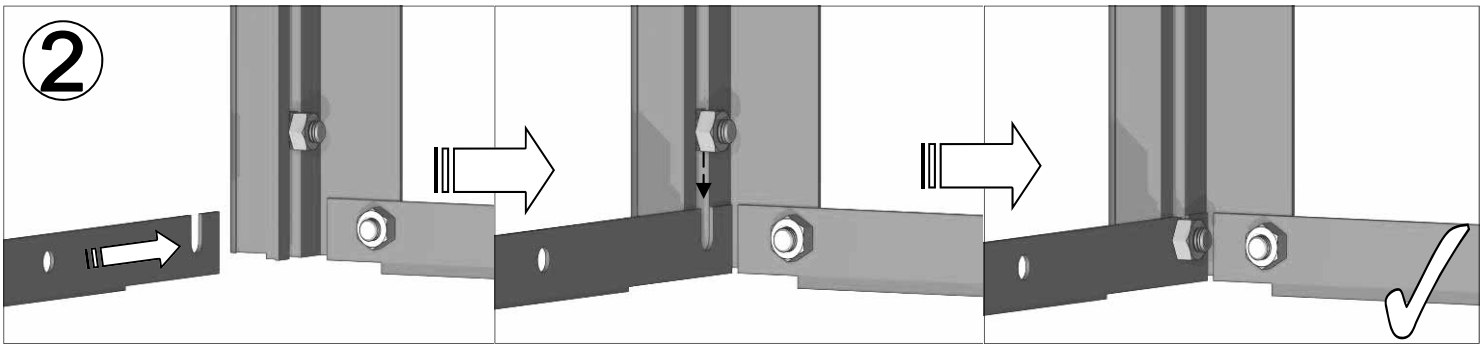

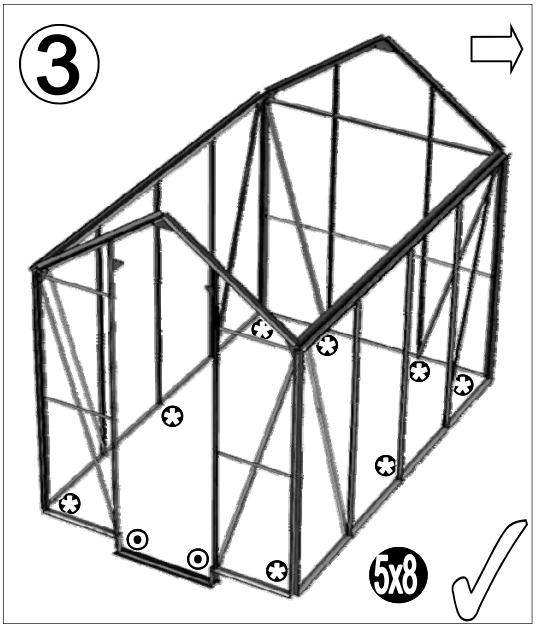

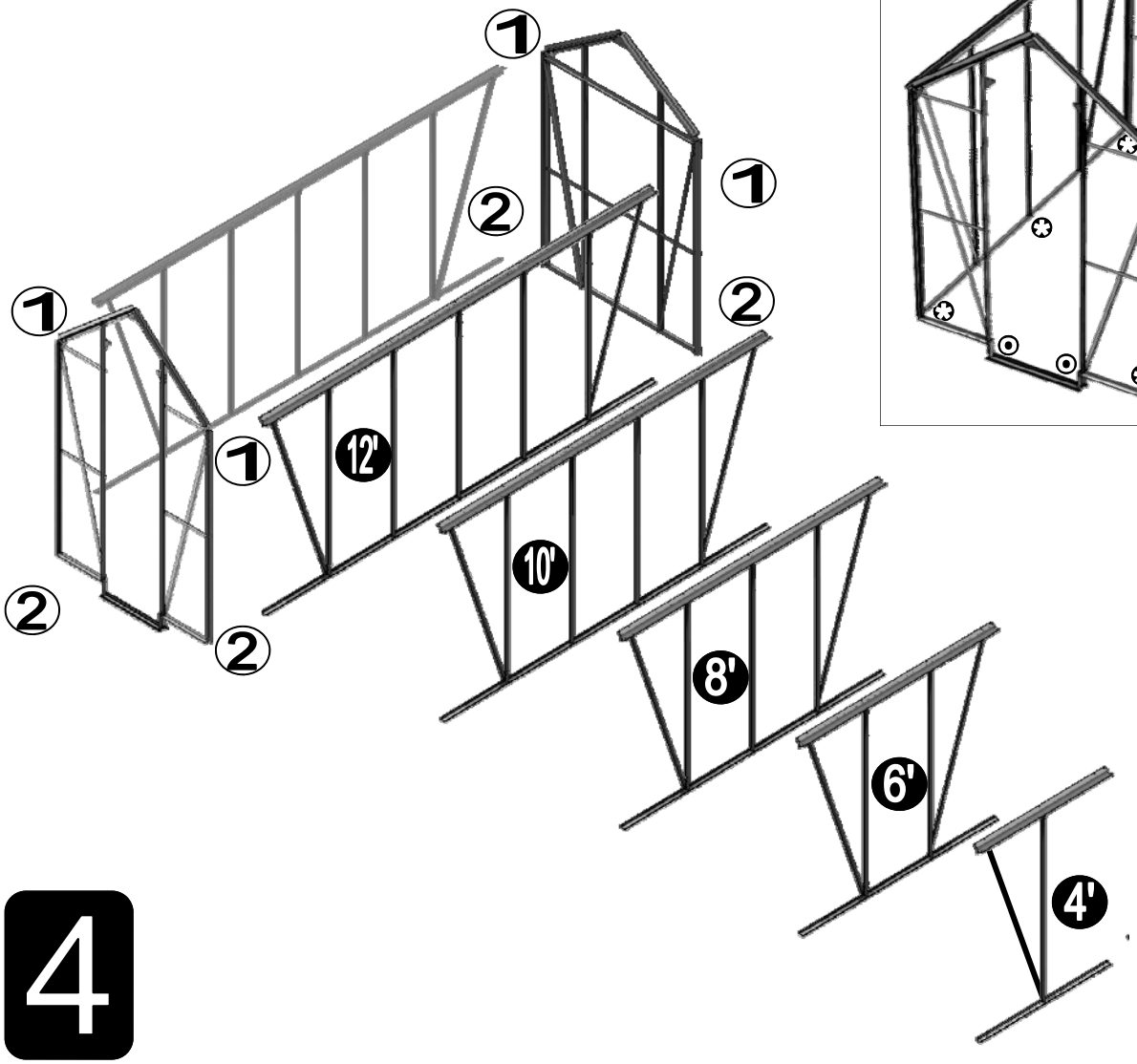

4

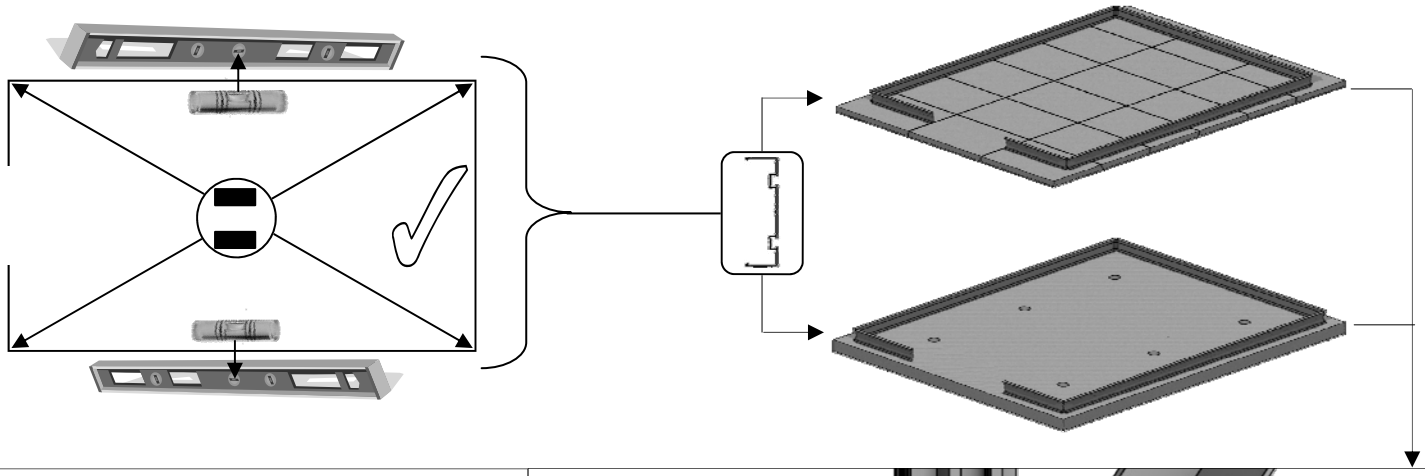

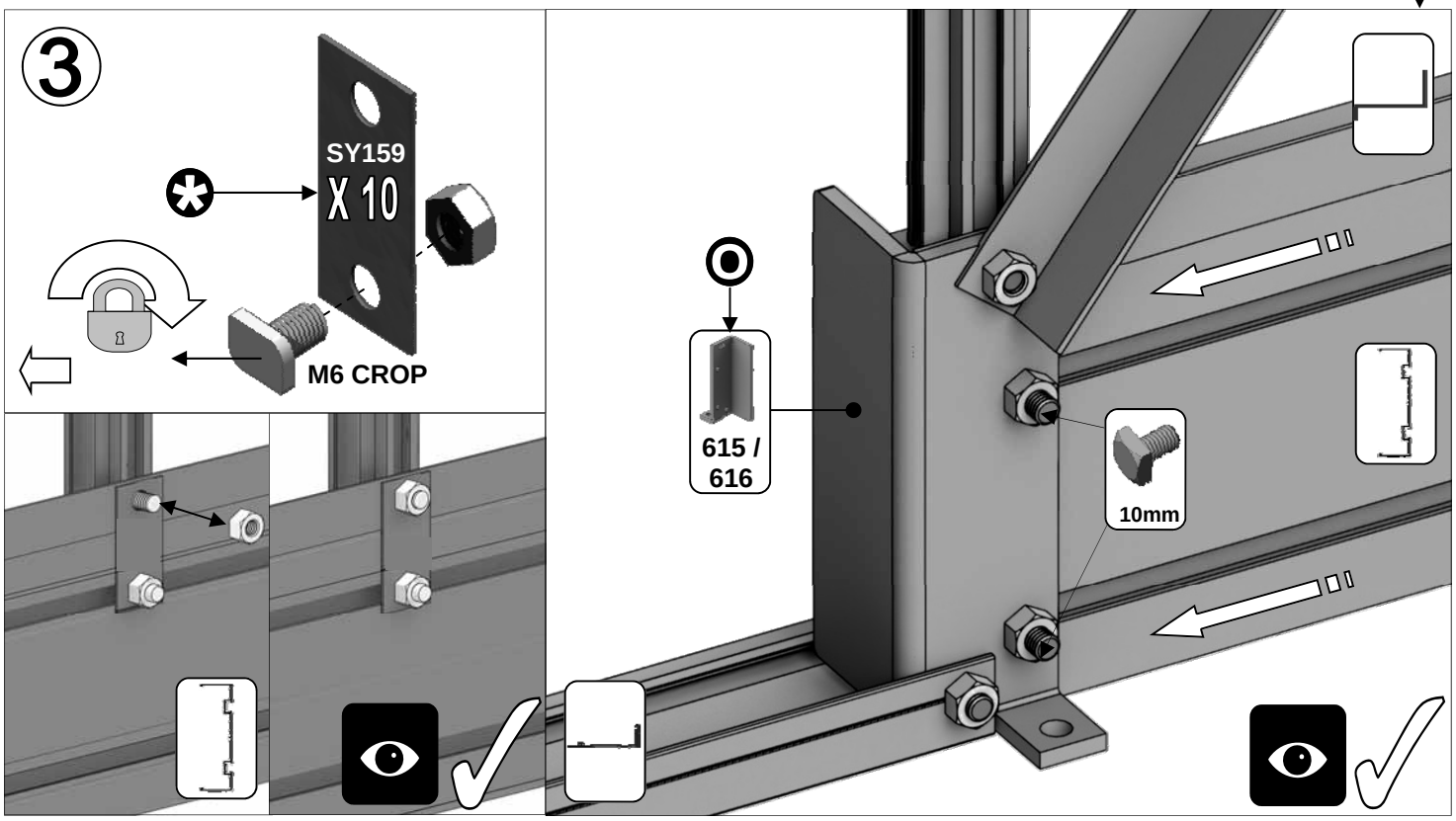

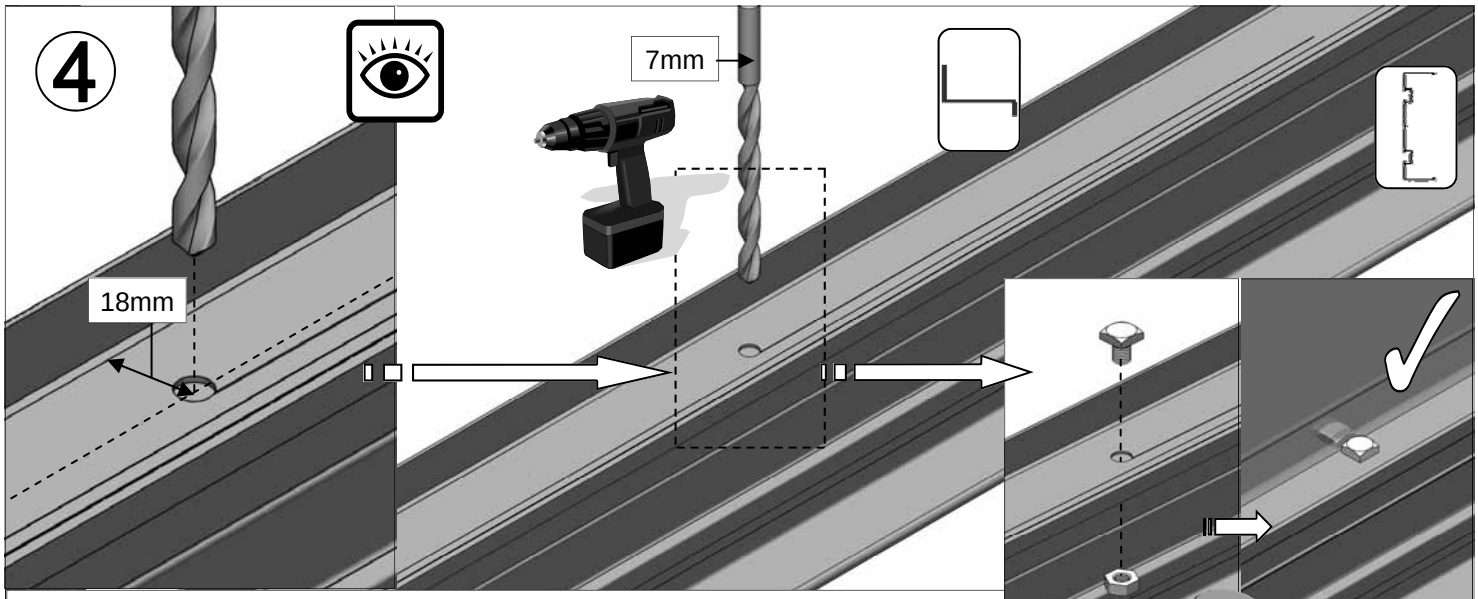

If you have a metal base and you live in a windy location then you should drill and fix the frame to the base using 10mm nuts and bolts. Drill centrally between two vertical glazing bars for neatness (it is not essential to drill every section). Make sure the bolt head does NOT interfere with the line of the glass. Cills should be drilled 18mm from the inside vertical face to avoid the front glass face. Do NOT anchor the structure to the ground until the end!

4’	Part No	mm	Quantity
	57	1240	1
8	178	925	2
1	85	622	1
	177	1049	2
	1046	375	1

6’	Part No	mm	Quantity
	26	1860	1
18	178	925	4
	93	636	1
	177	1049	4
	1046	375	2

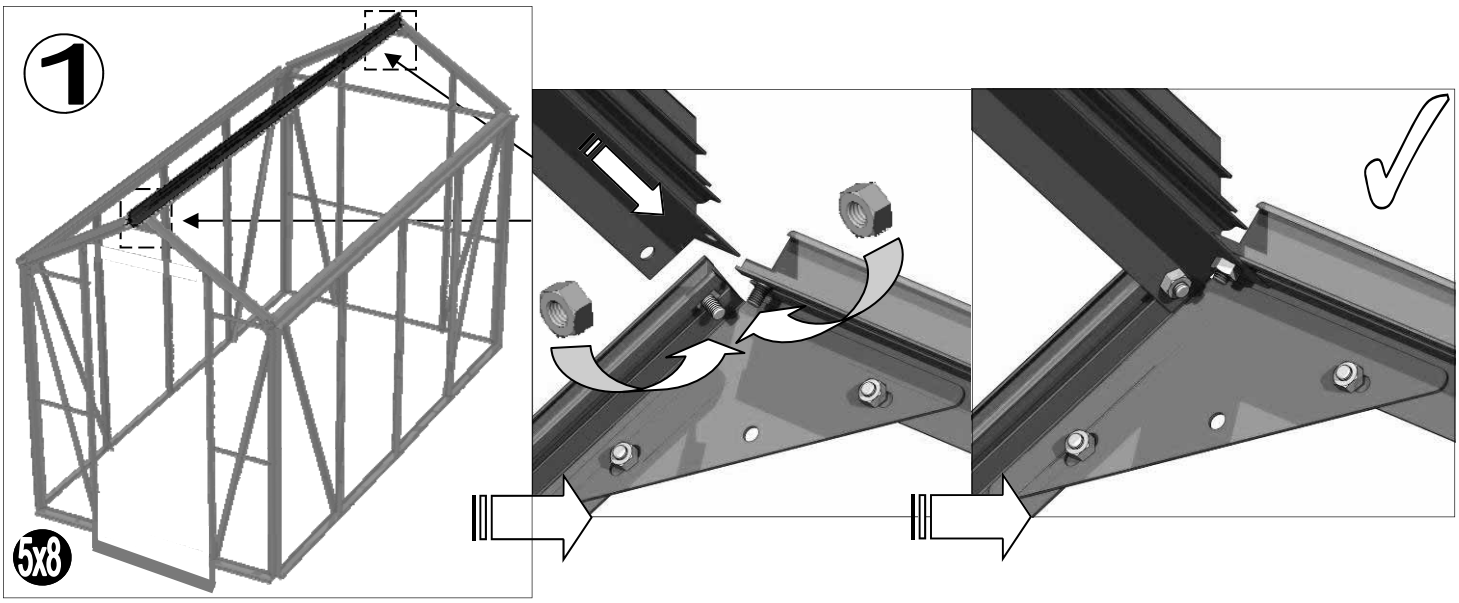

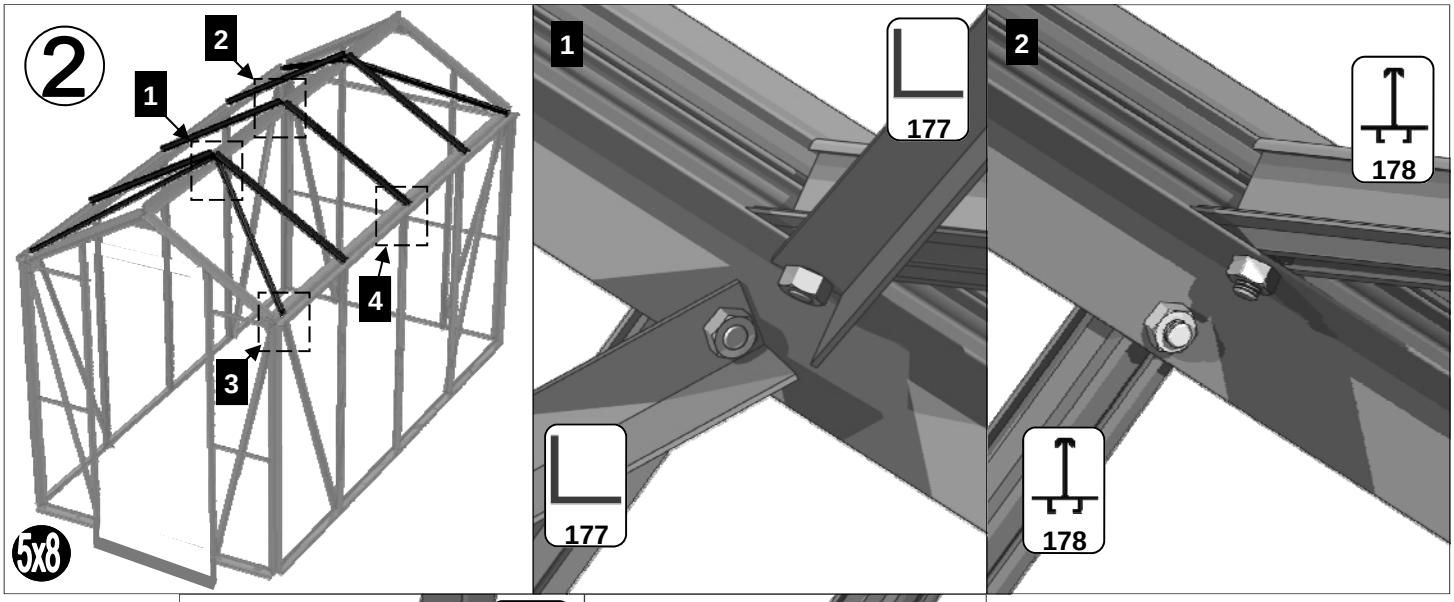

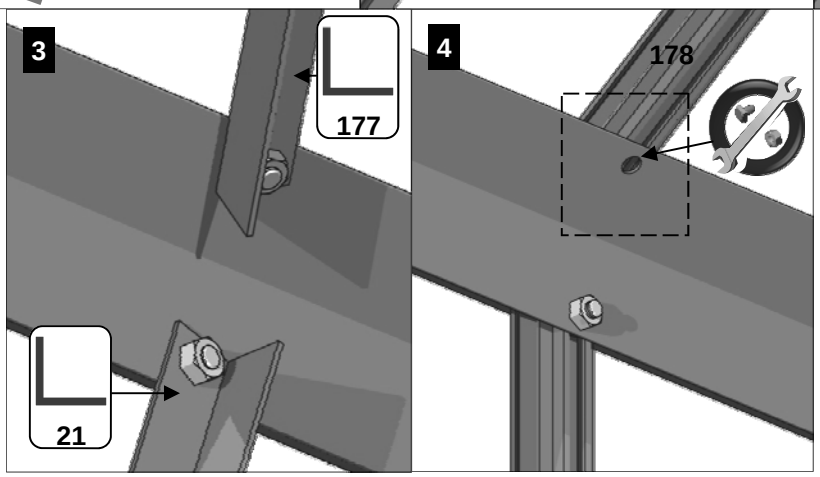

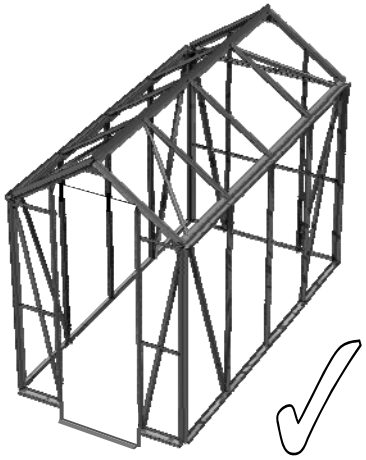

5

8’	Part No	mm	Quantity
	12	2480	1
	178	925	6
26	93	636	2
	177	1049	4
	1046	375	3

10’	Part No	mm	Quantity
	6	3100	1
	178	925	8
36	93	636	3
	177	1049	4
	1046	375	4

12’	Part No	mm	Quantity
	2	3720	1
	178	925	10
42	93	636	4
	177	1049	4
	1046	375	5

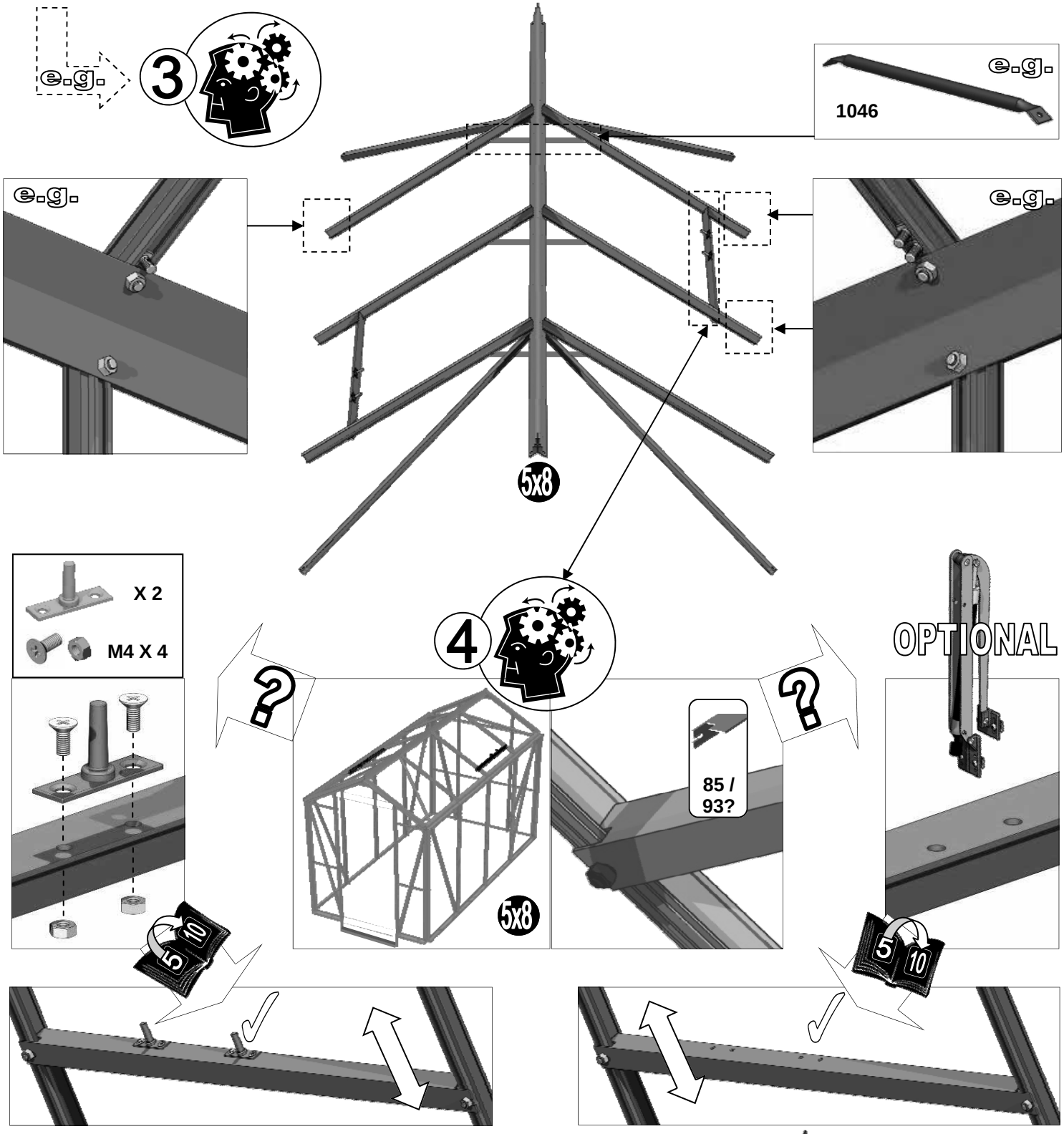

Part No	mm	Quantity
121	619	1
123	612	1
124	610	2

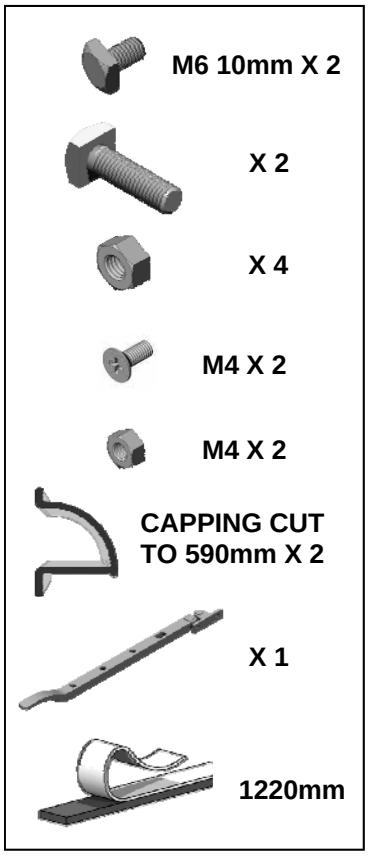

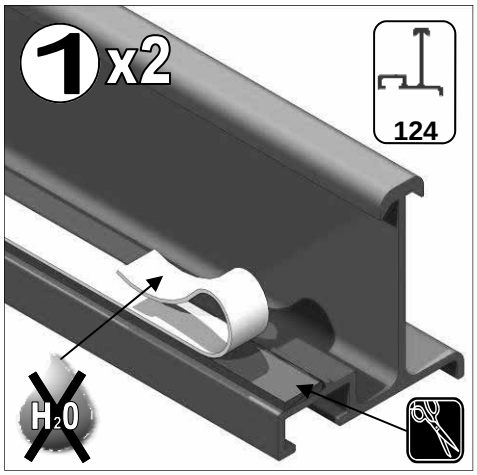

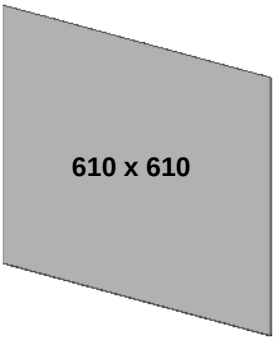

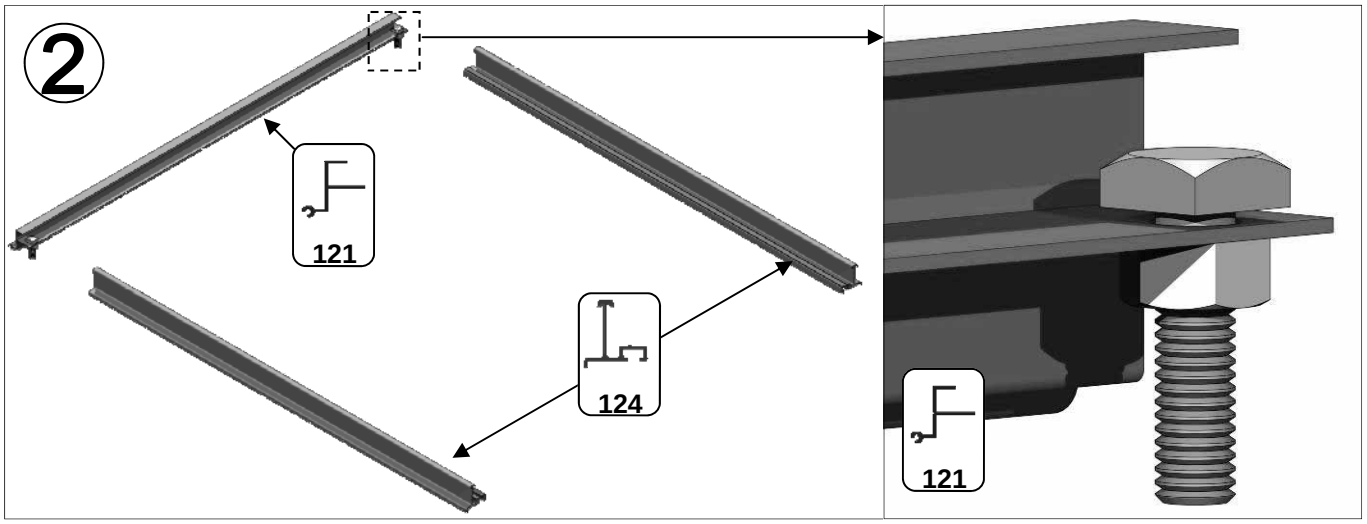

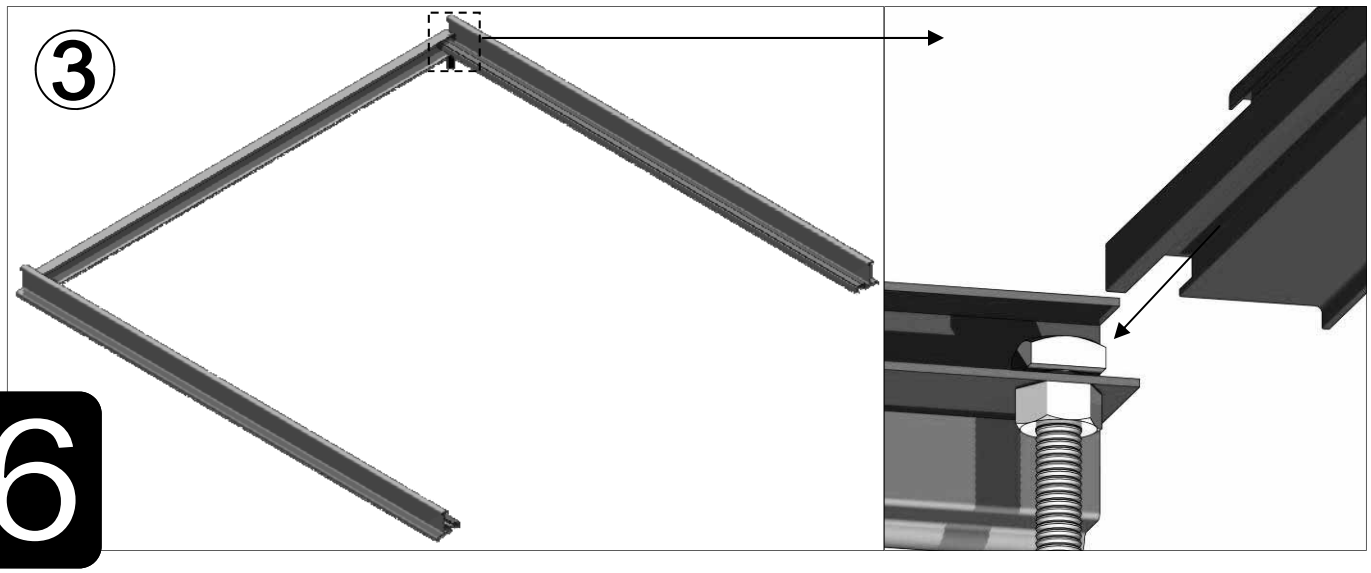

6

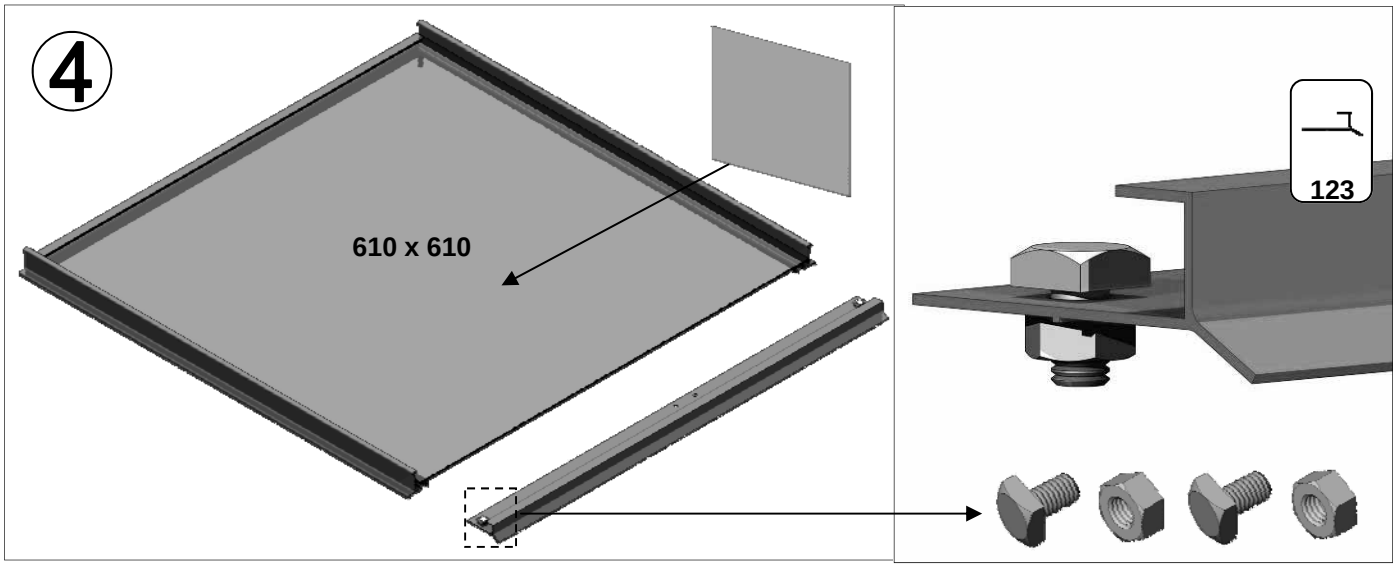

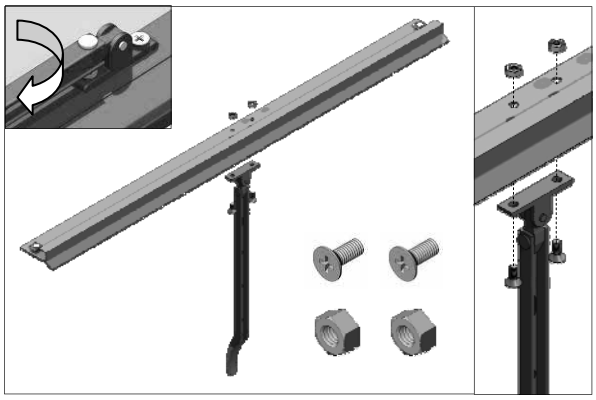

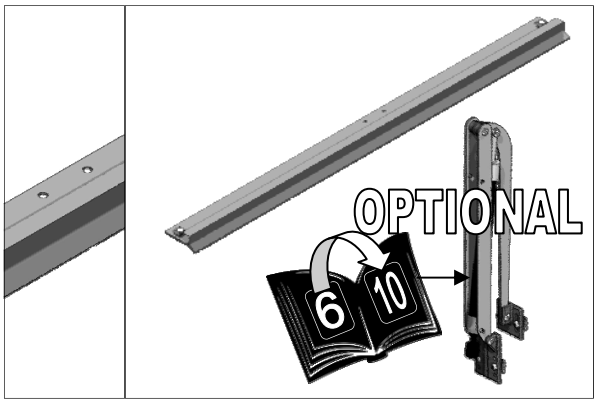

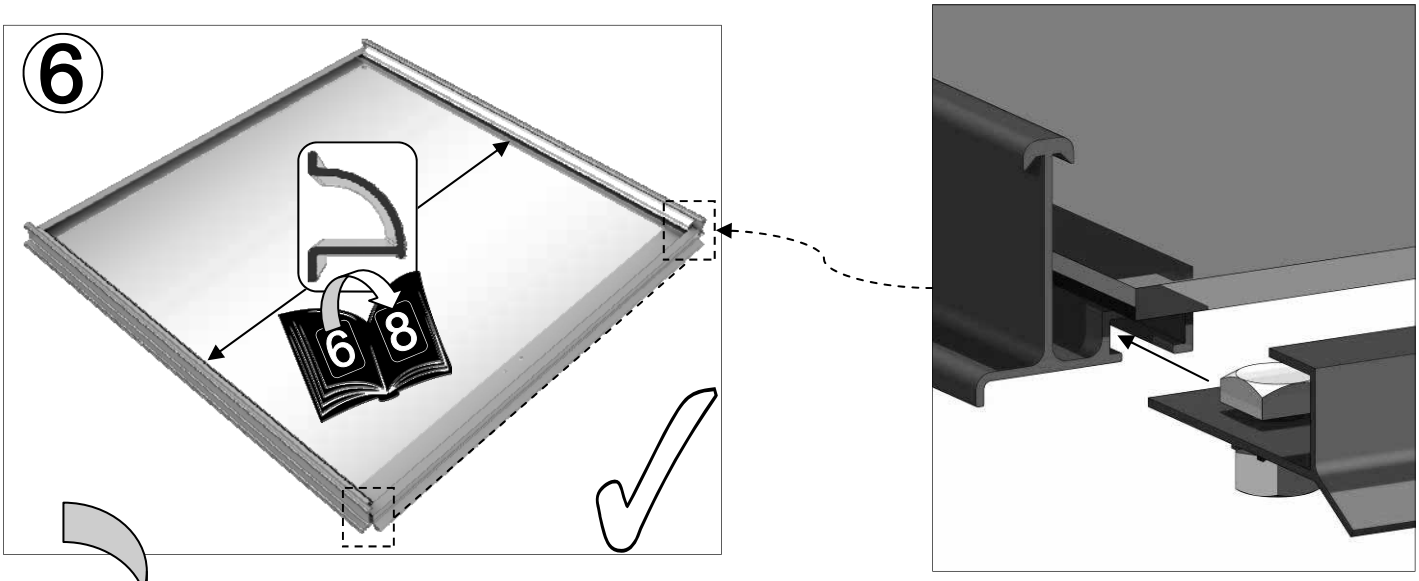

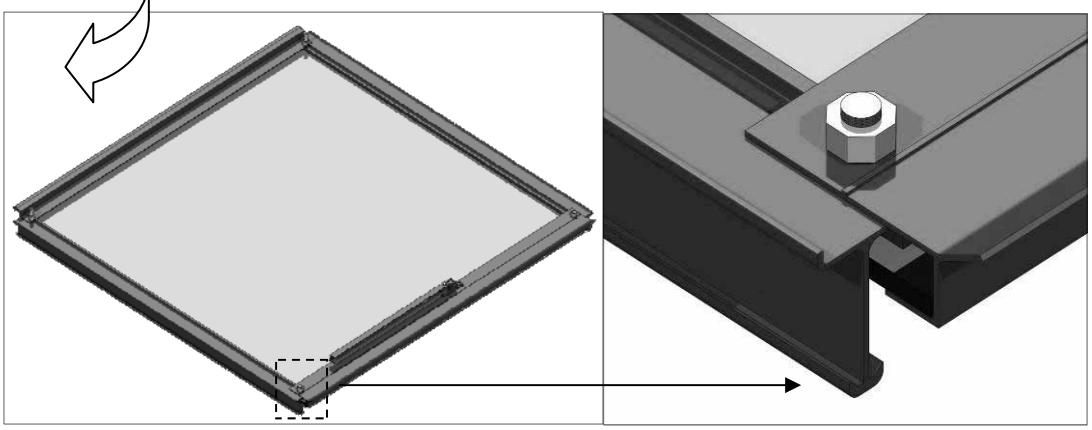

6

Part No	mm	Quantity
630	1730	2
634	306	2
650	306	2
651	306	2
652	1730	1
653	1730	1
384		2
629		8
571		1
583		24
SYBOLM6X11		4
SYNUTM6		4

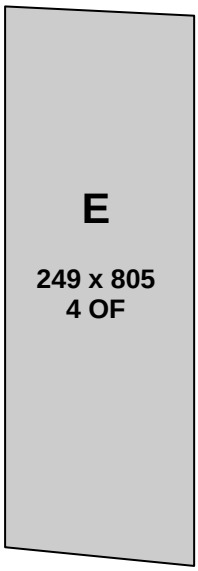

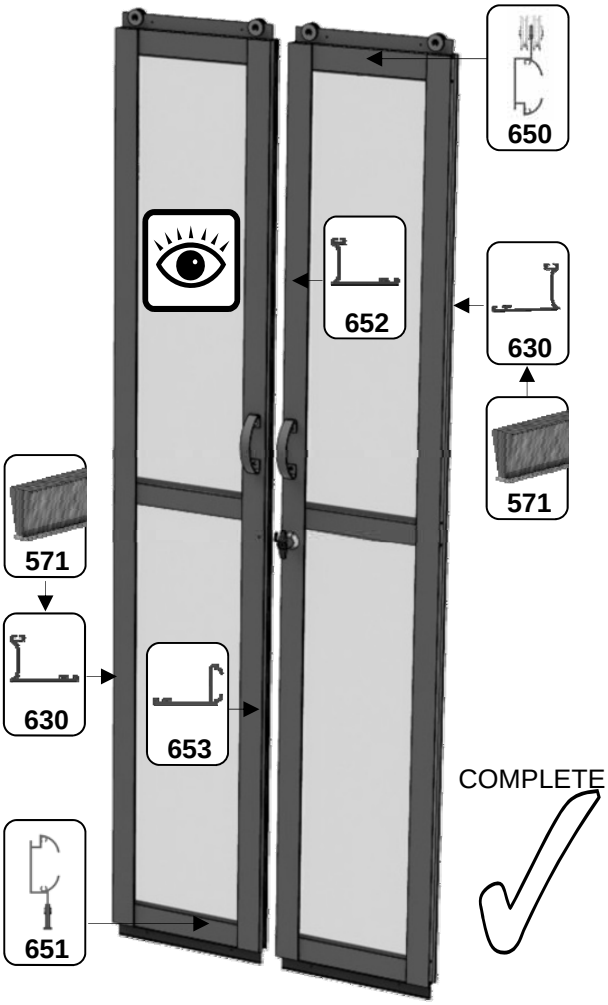

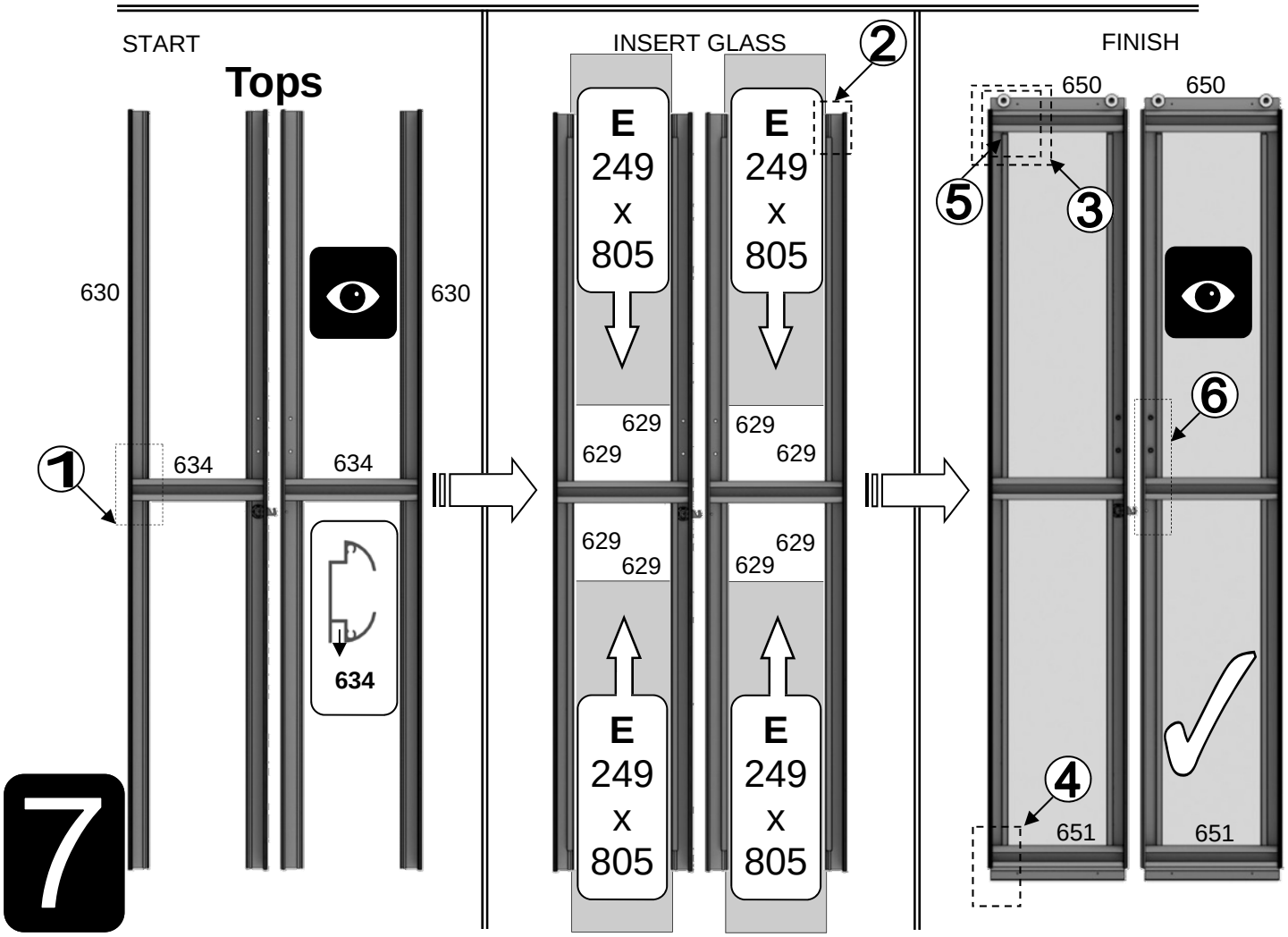

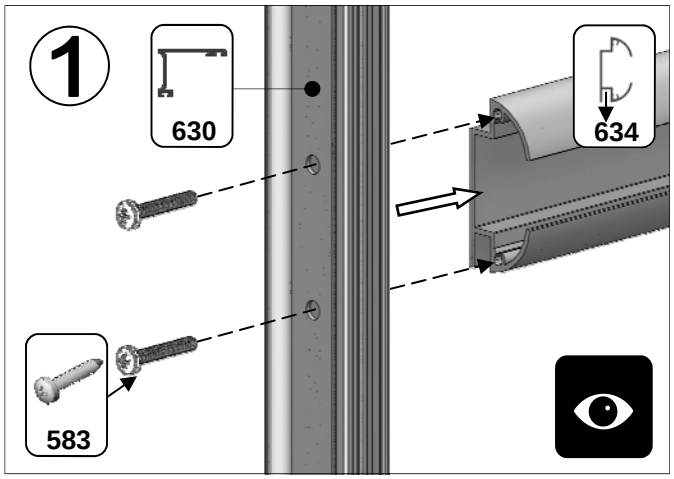
1
630
634
583

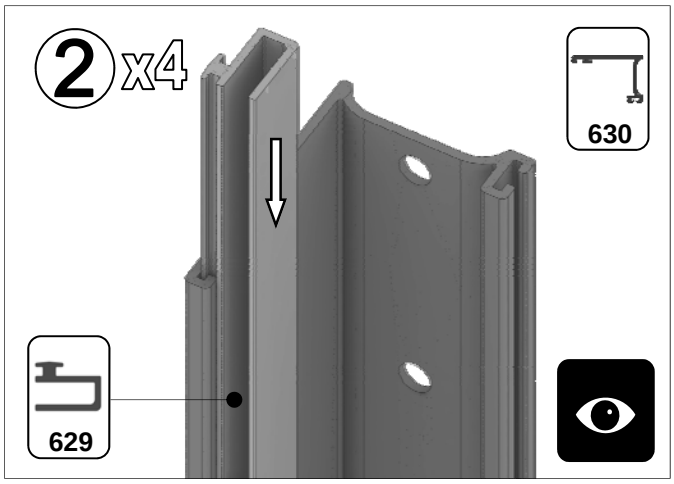
2
x4
630
629

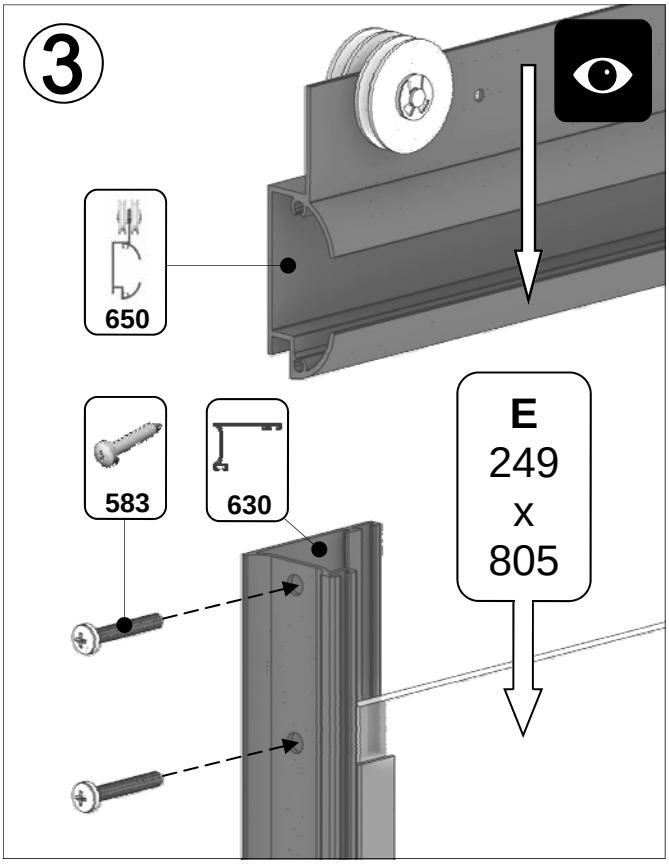
3
650
583
630
E
249
x
805

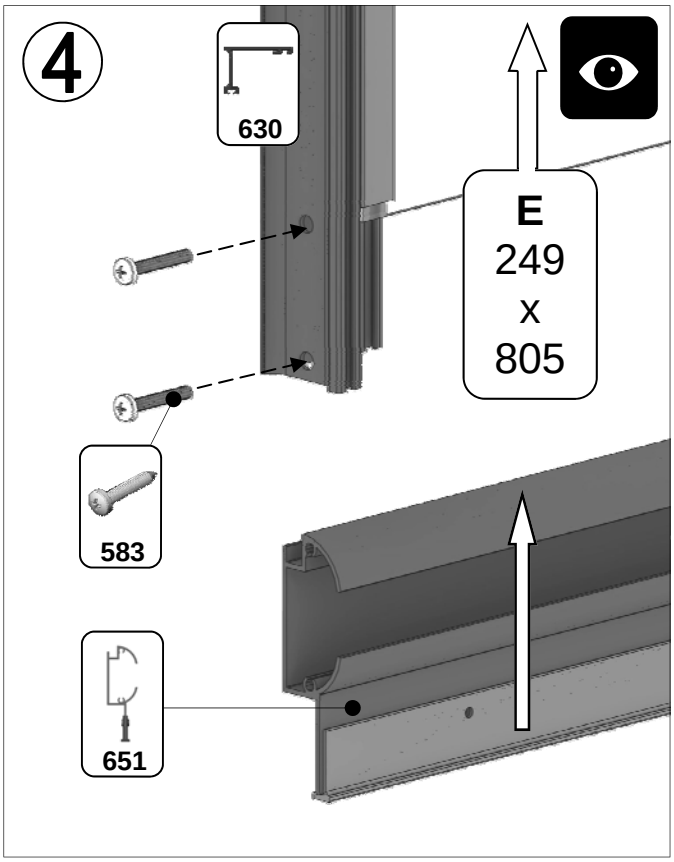
4
630
E
249
x
805
583
651

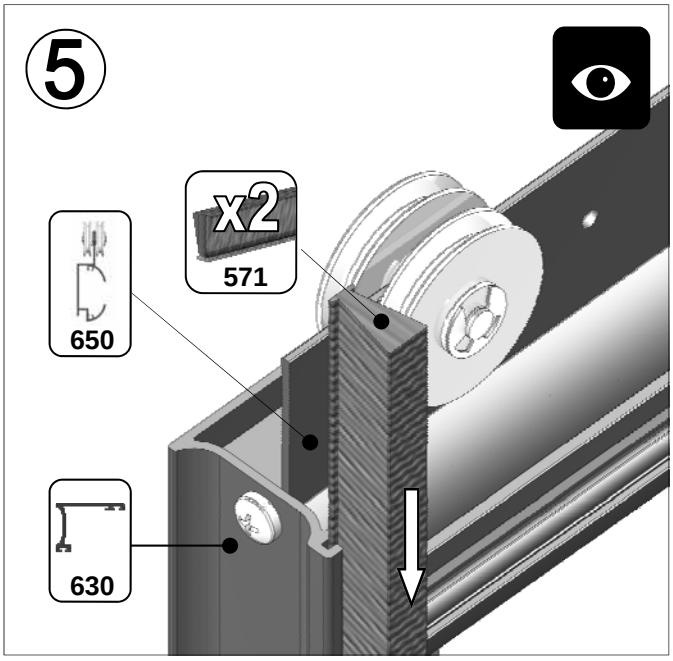
5
x2
571
650
630

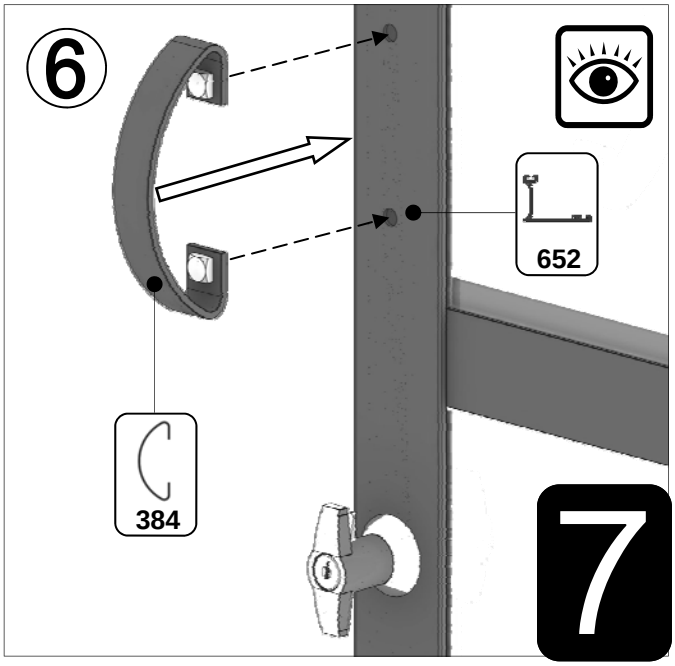
6
652
384
7

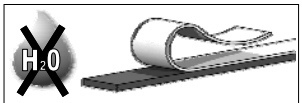

The adhesive foam (SYFOAM) goes longitudinally over the greenhouse frame, see examples to the right. It never goes horizontally, the glass just sits directly onto the aluminium cills in the sides.

Remove the white paper on the foam before it gets wet as it is difficult to remove, i.e. it comes off in small pieces.

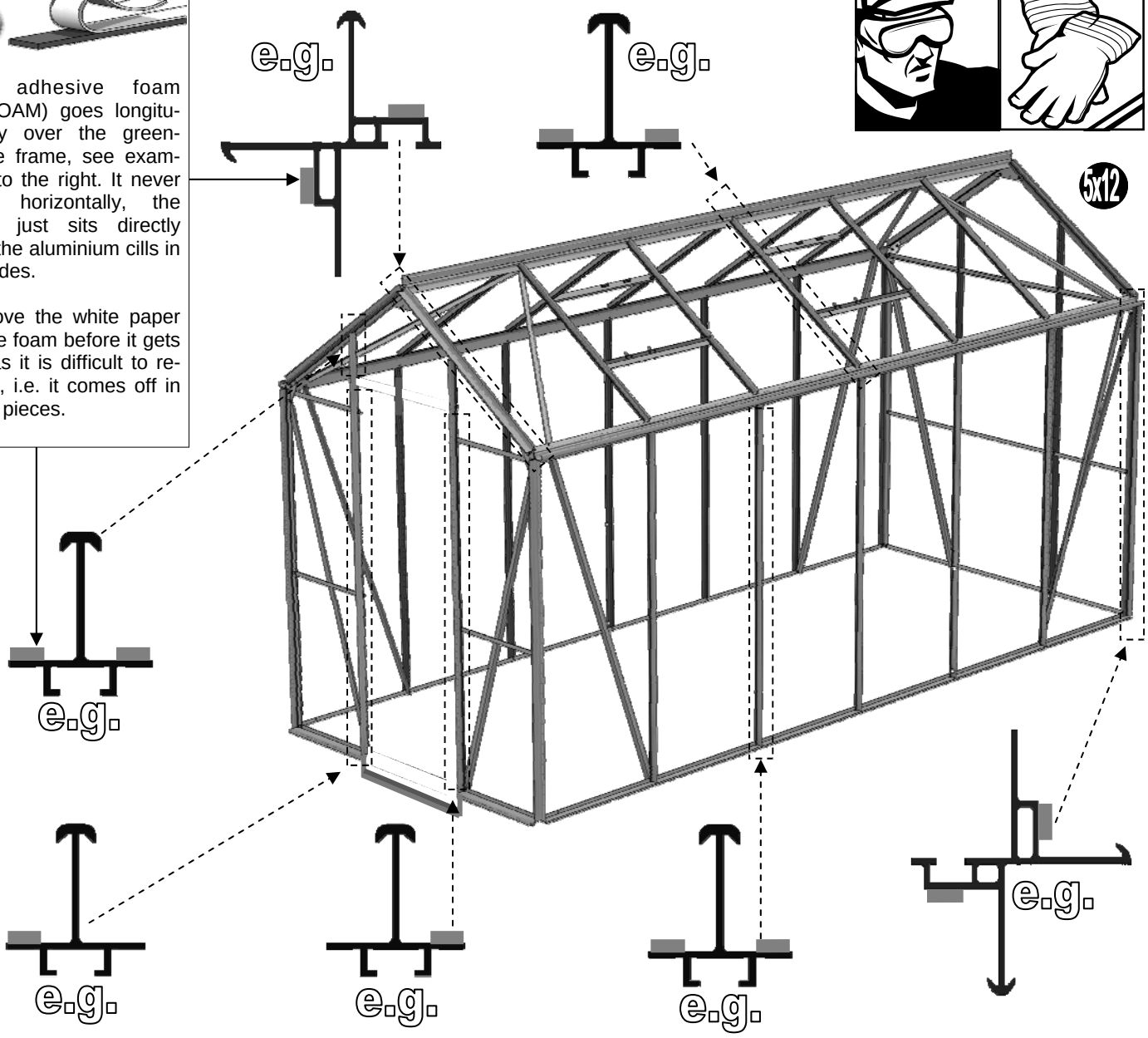

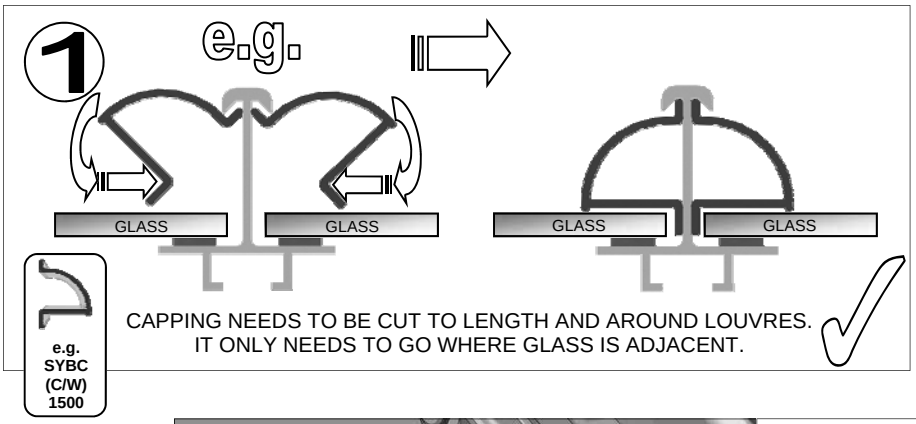

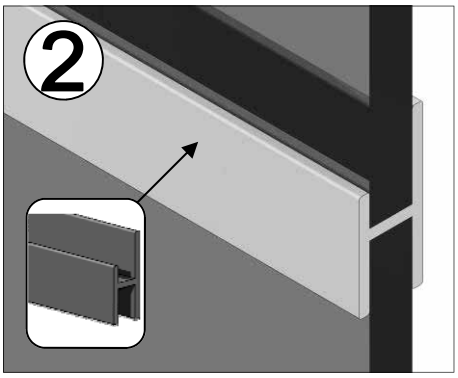

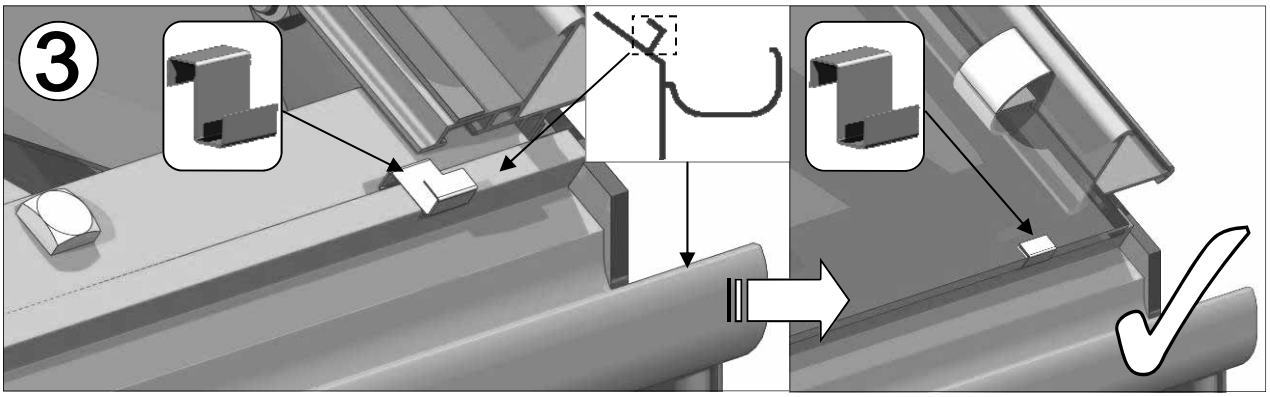

8

5 GLOUCESTER TOUGHENED GLASS

5x6

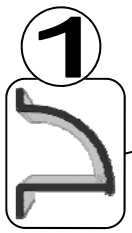

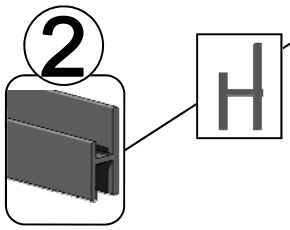

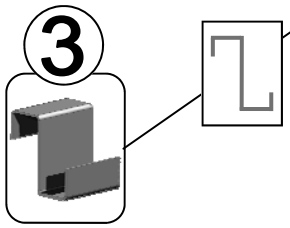

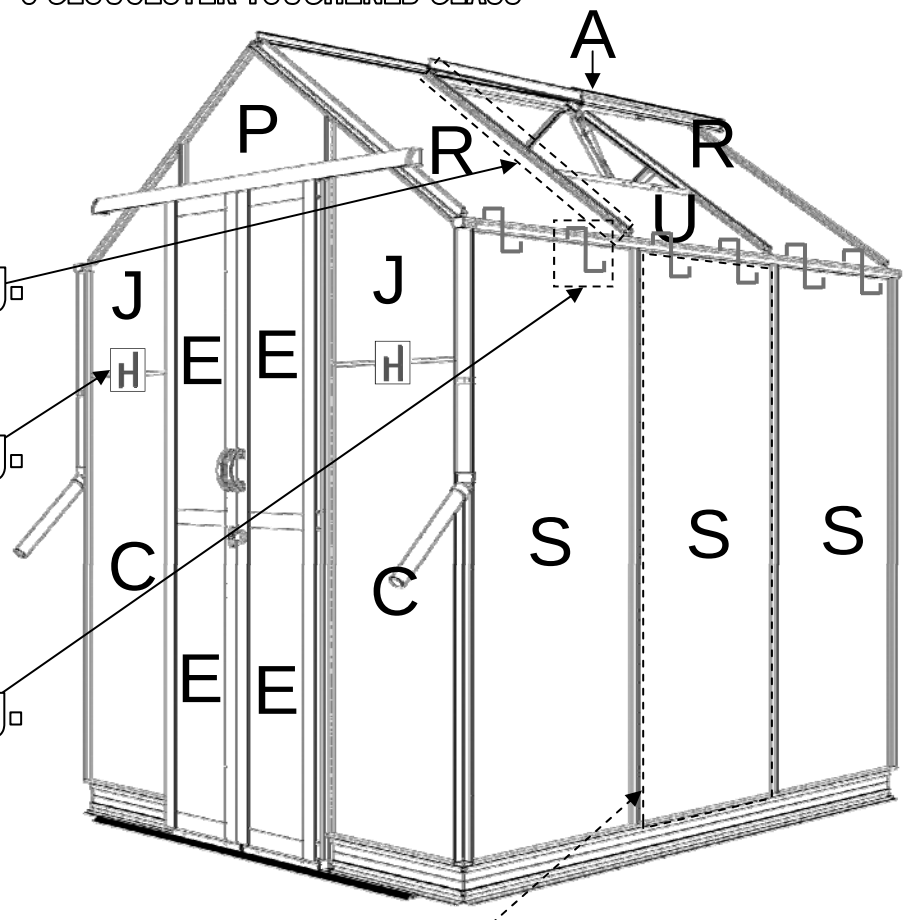

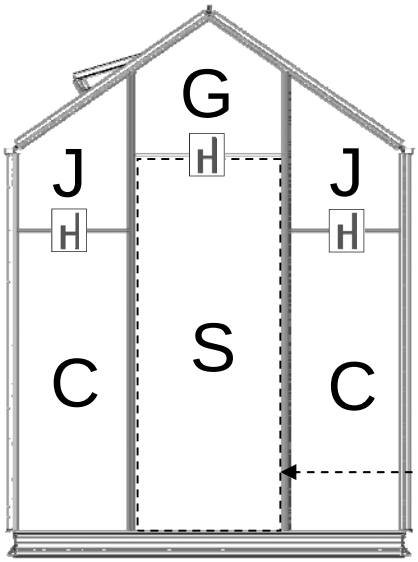

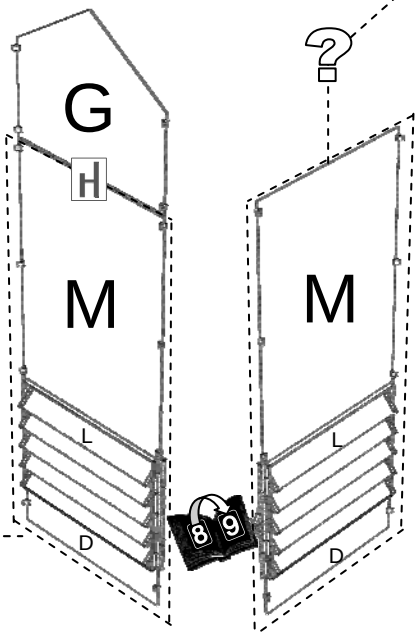

	Size (mm)	4'	6'	8'	10'	12'
S	610 x 1500	4	6	8	9	11
R	610 x 940	3	5	6	7	8
A	610 x 610	1		2	3	4
U	610 x 345	1		2	3	4
M	610 x 904	1			2	
D	610 x 153	1			2	
L	573 x 100	5			10	
C	457 x 1197	4				
E	249 x 805	4				
H	610mm (ROSEPS)	5 (4 NEED TO BE CUT DOWN)				

LOUVRE MUST GO BACK
CENTRE ON THE 5X4 MODEL

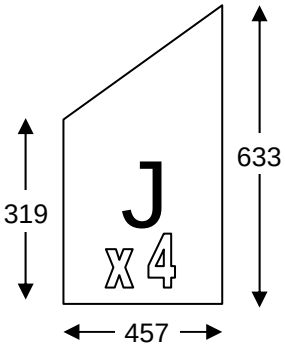

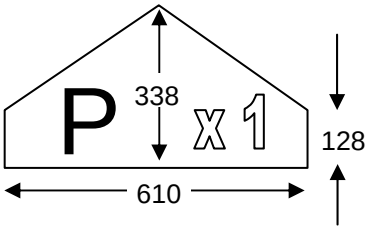

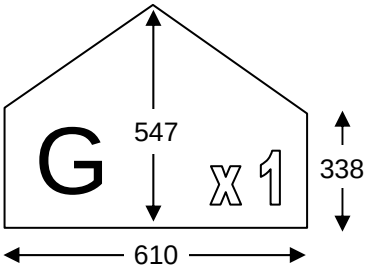

9	Part No	HE583	SYBOL M6X11 CROP	SYNUT M6
	Detail			
	Length 'mm'	19	11	N/A
	Quantity	4	4	4

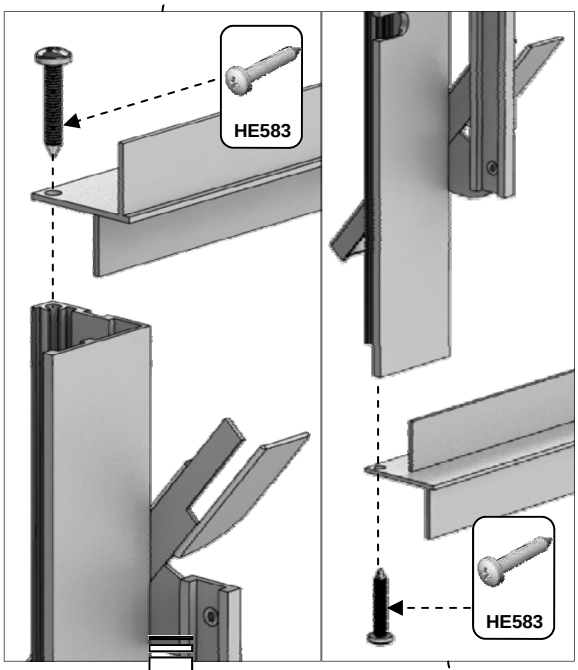

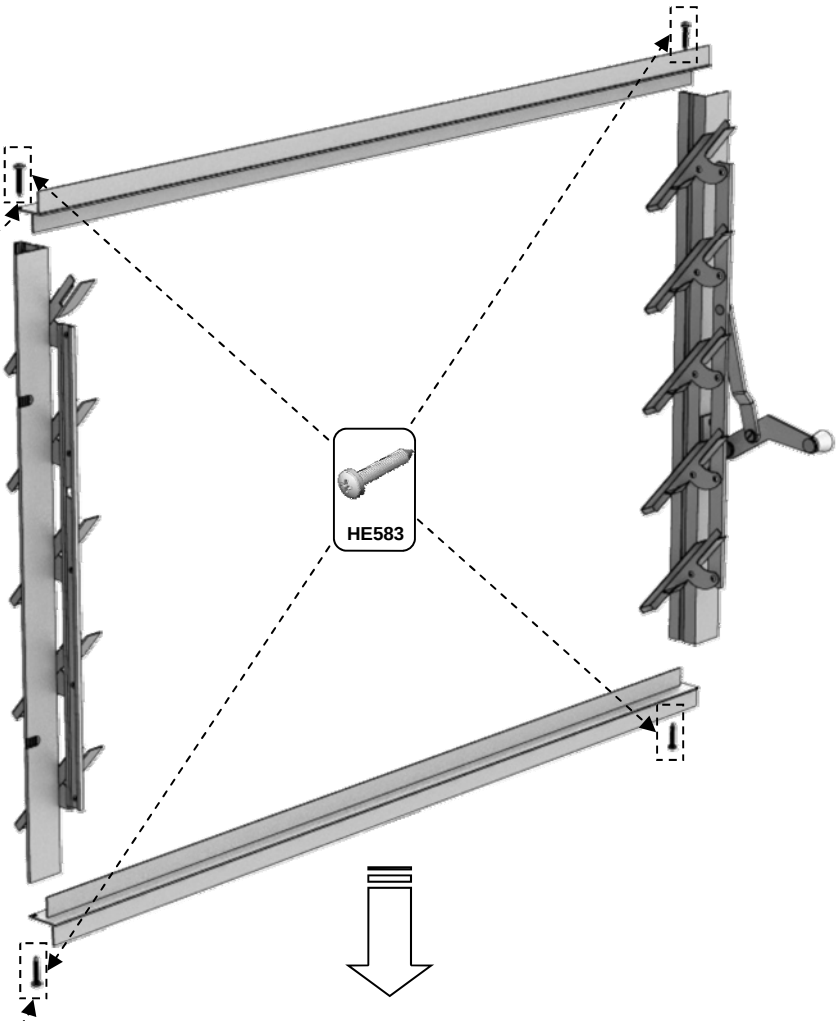

e.g.

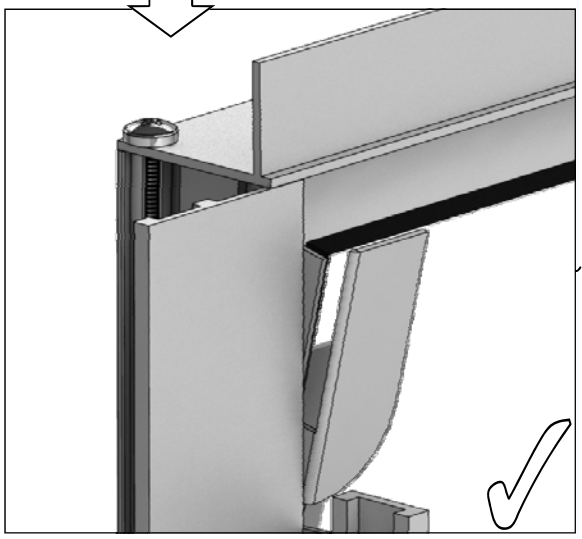

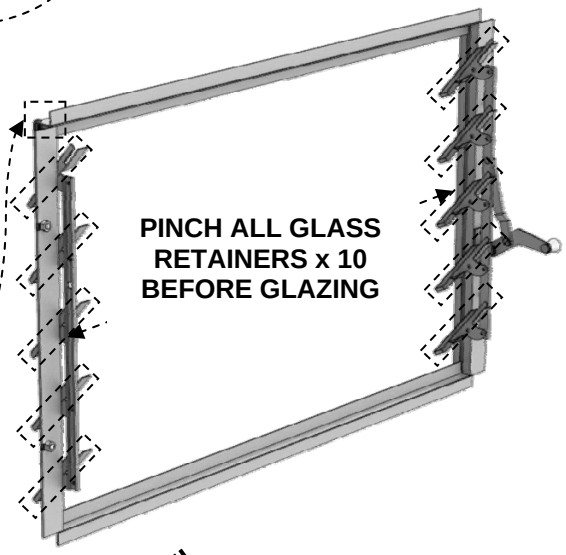

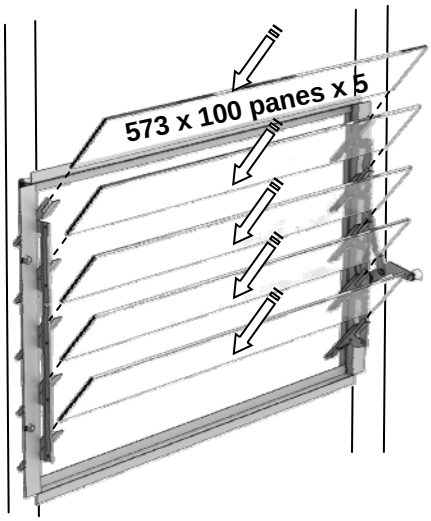

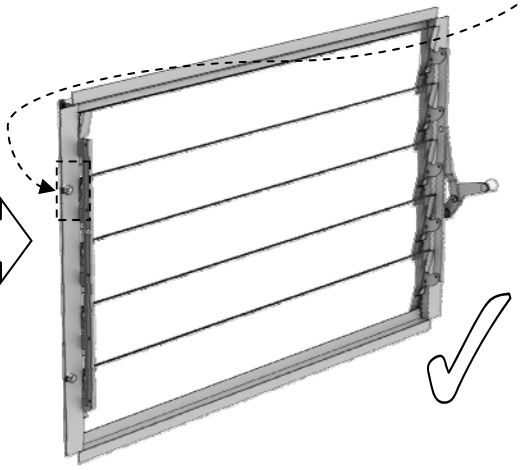

9

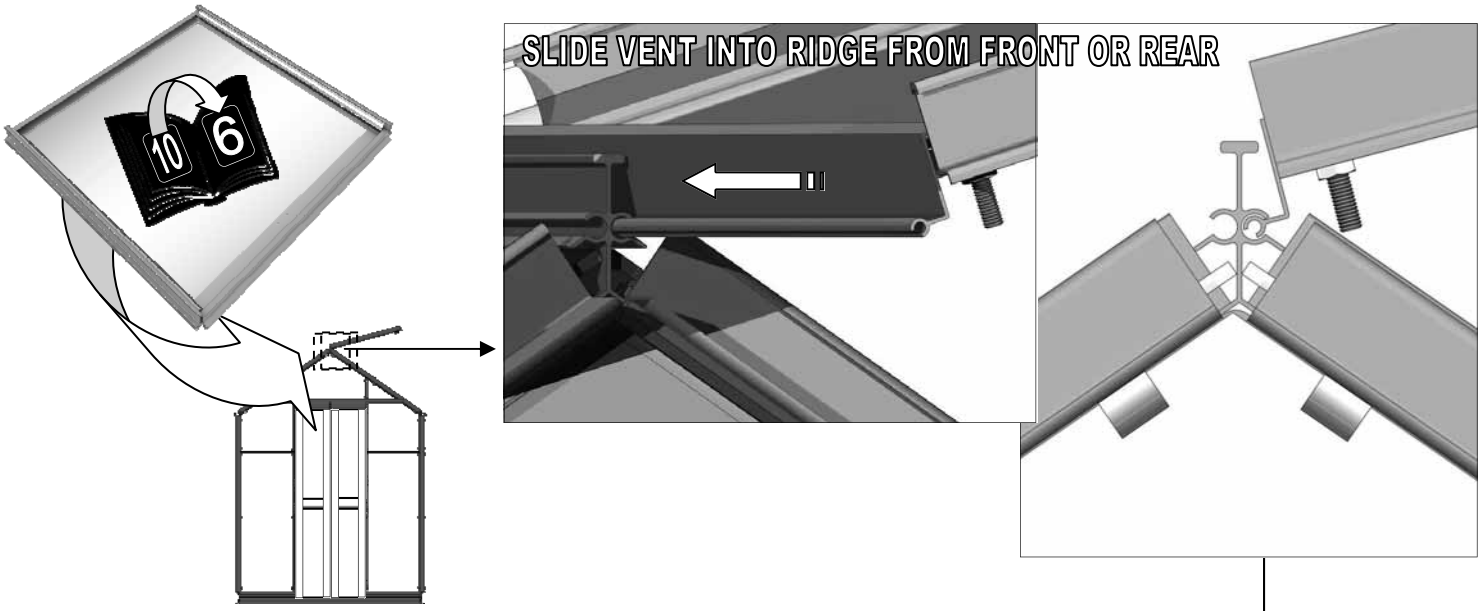
10
6
SLIDE VENT INTO RIDGE FROM FRONT OR REAR

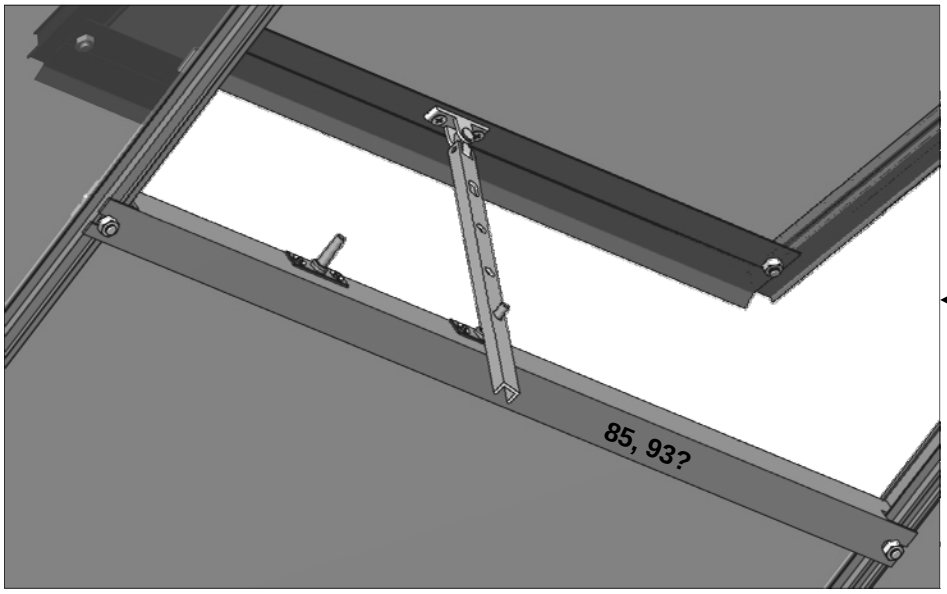
85, 93?

10
5

OPTIONAL

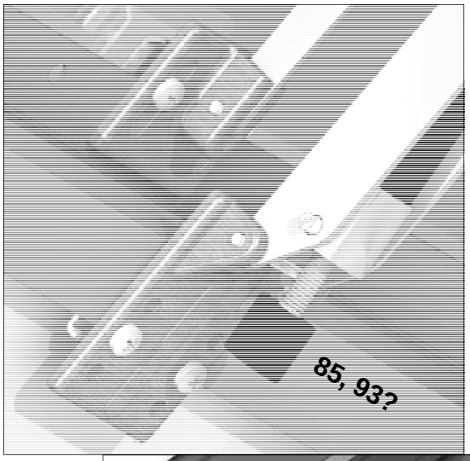
85, 93?

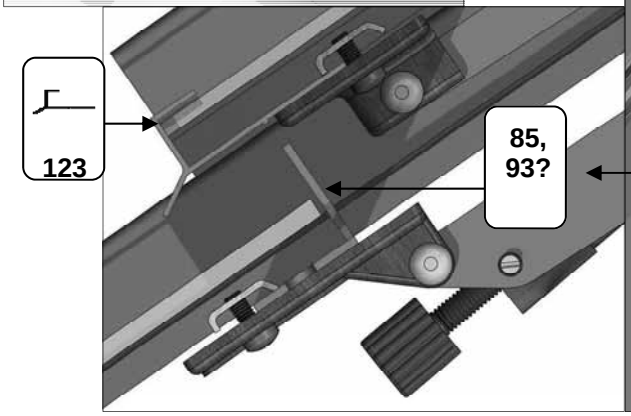
123
85,
93?

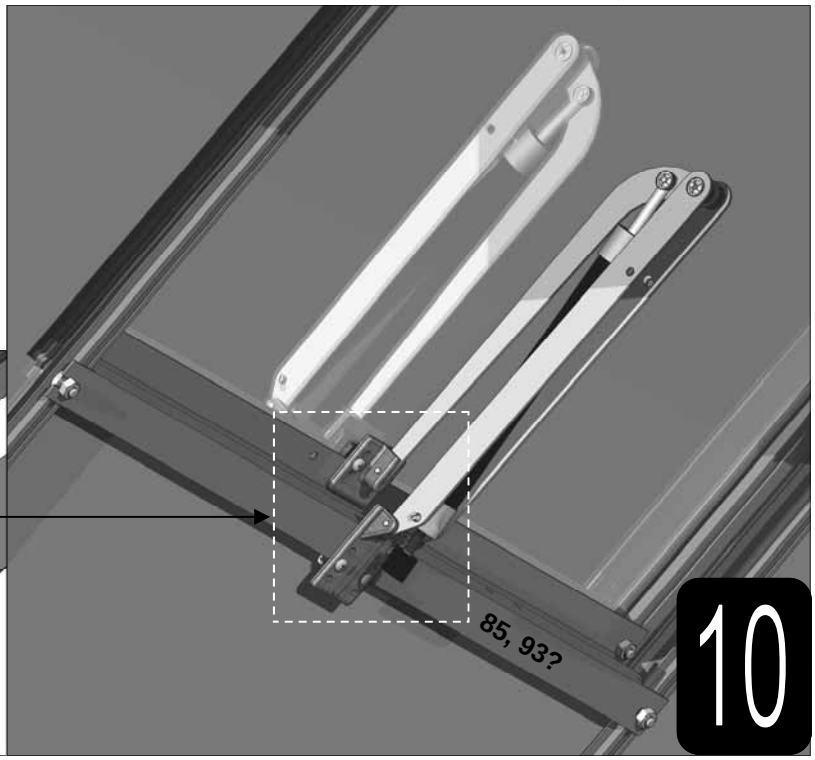
85, 93?
10

Part No	mm	Quantity
402	1320	1
627	612	1
SYBOLM6X11		7
SYNUTM6		7

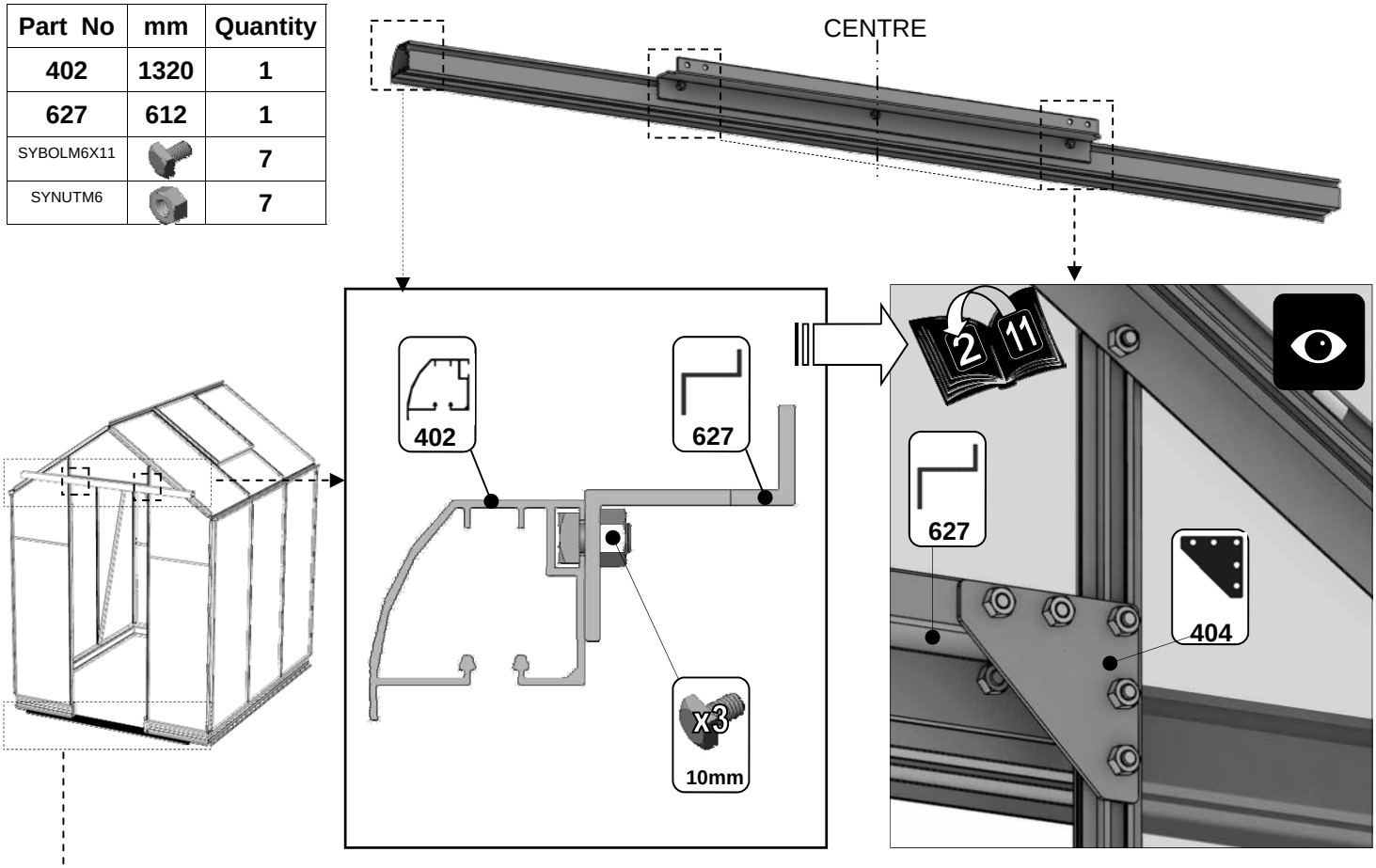

Part No	mm	Quantity
374	1320	1
614	574	1

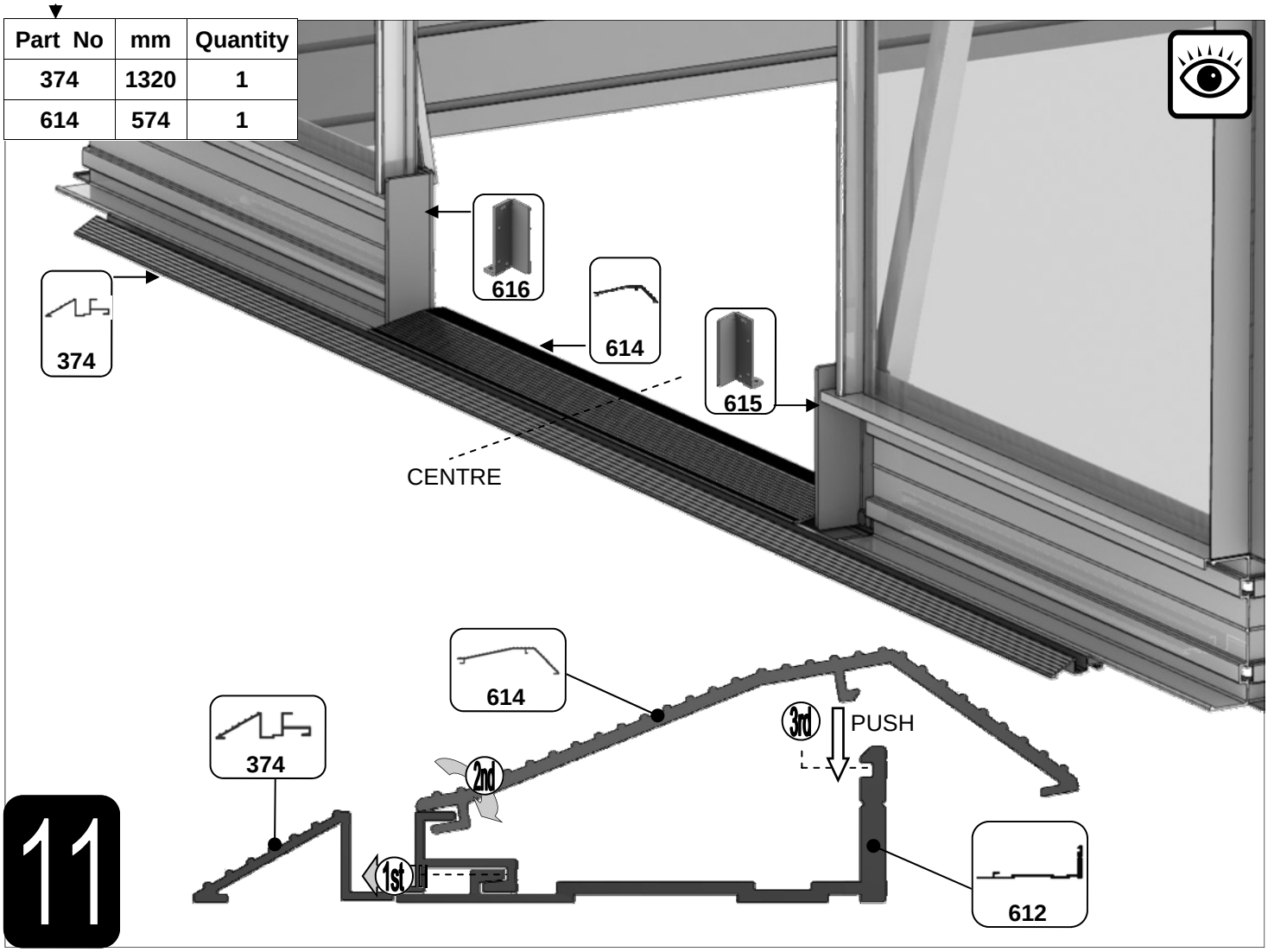

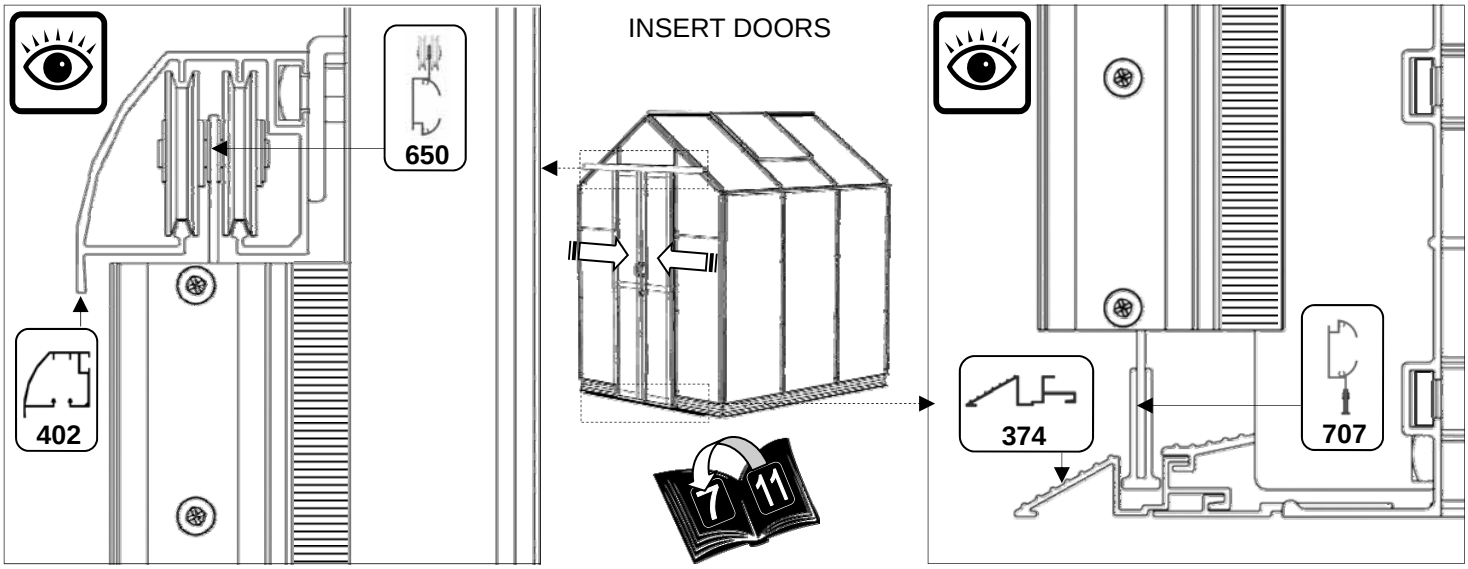

Part No	mm	Quantity
400	n/a	2
560	n/a	2
SYNUTM6		2

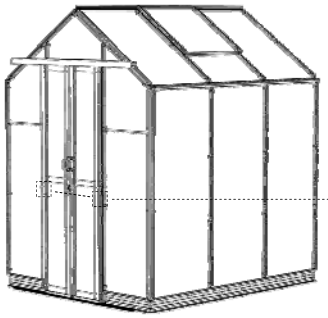

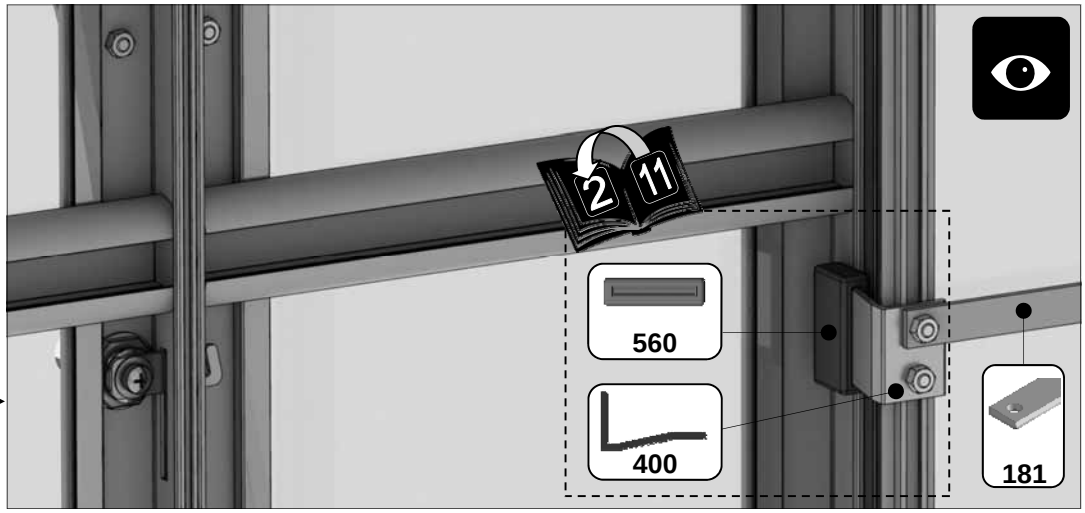

Part No	mm	Quantity
300	n/a	2
SYBOLM6X11		4
SYNUTM6		4

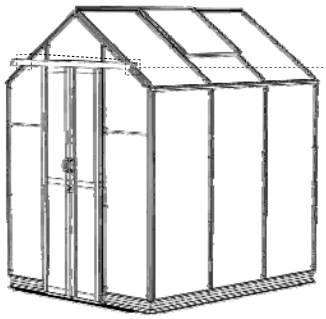

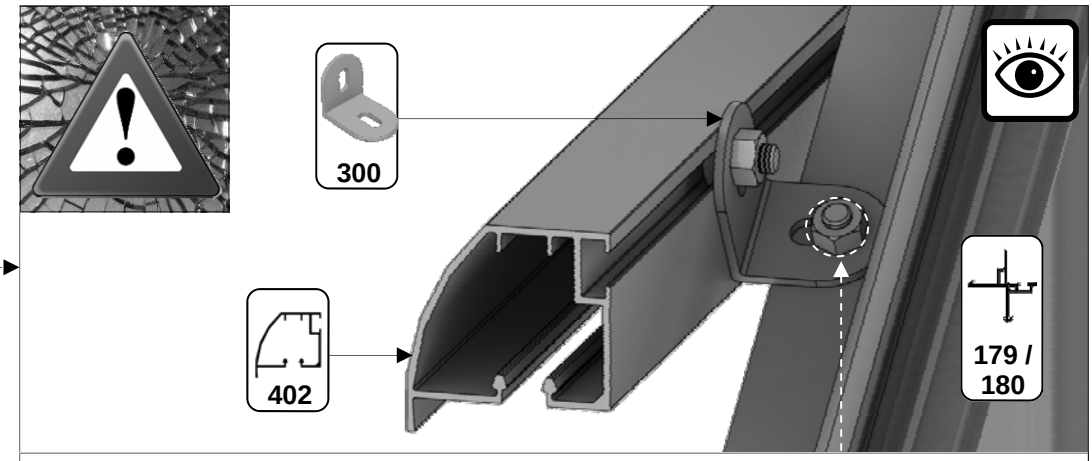

DRILL 7mm HOLE AVOIDING GLASS NOT SUPPLIED.

11

Part No	mm	Quantity
02 -1825 NARROW HEAD		2
SYSCR2		10
SYRAWL		12
300		10
SYBOLM6X11CROP		10
SYNUTM6		10

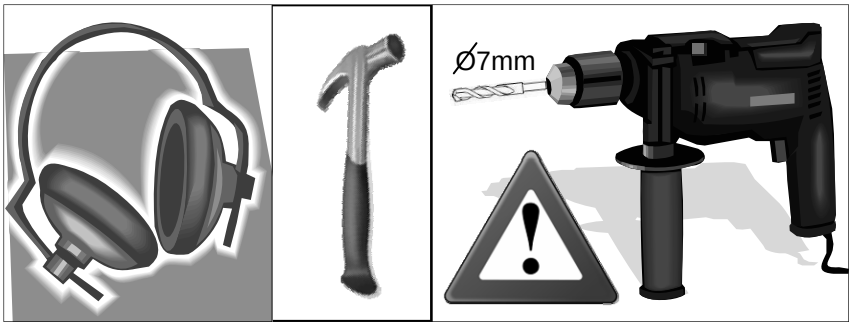

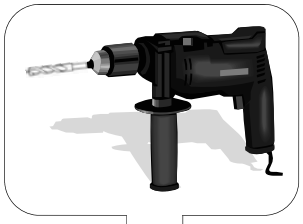

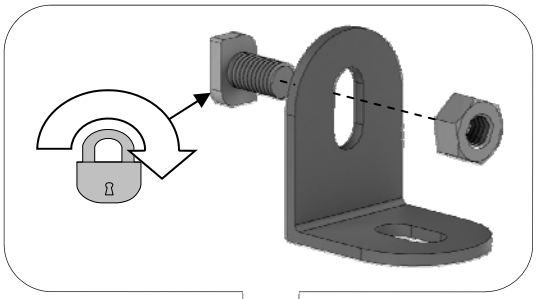

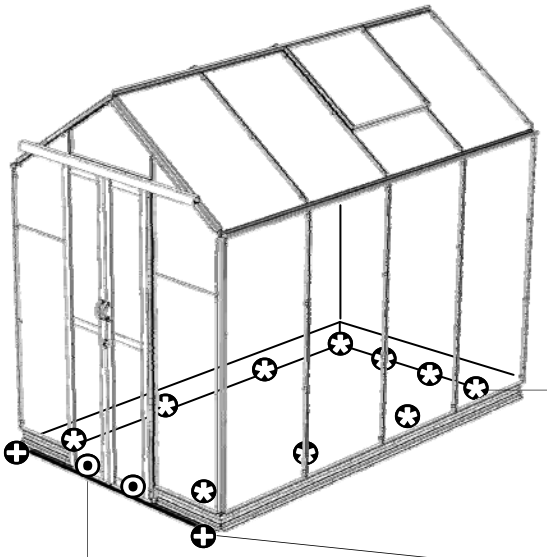

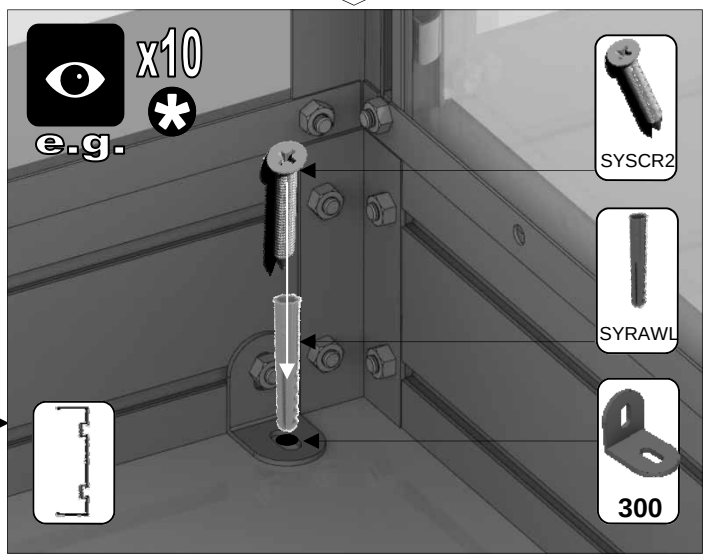

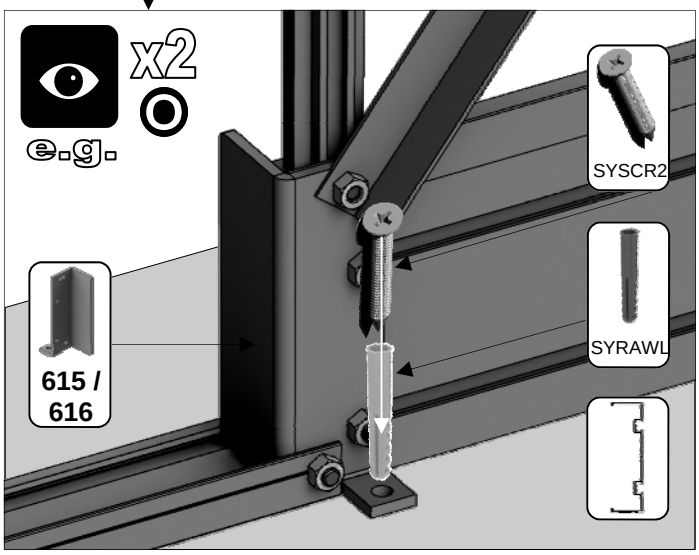

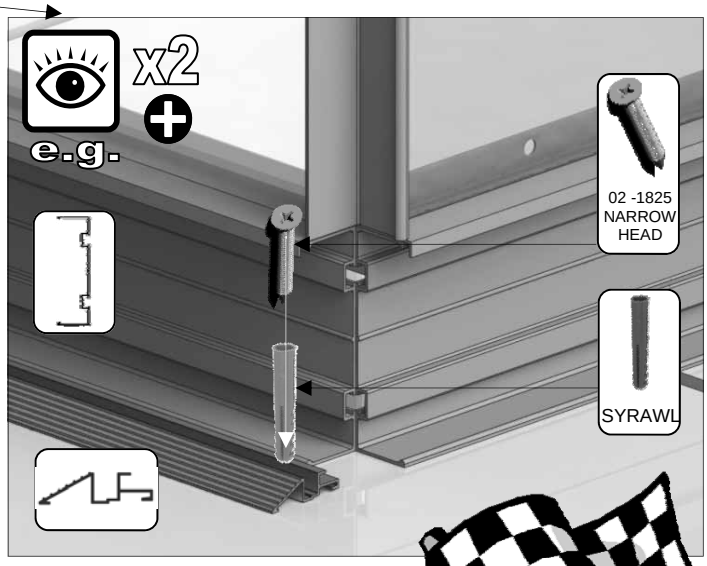

HE565 DOOR TRACK CAPS

TO BE FITTED AFTER DOOR/S ARE HUNG!

1.(st)

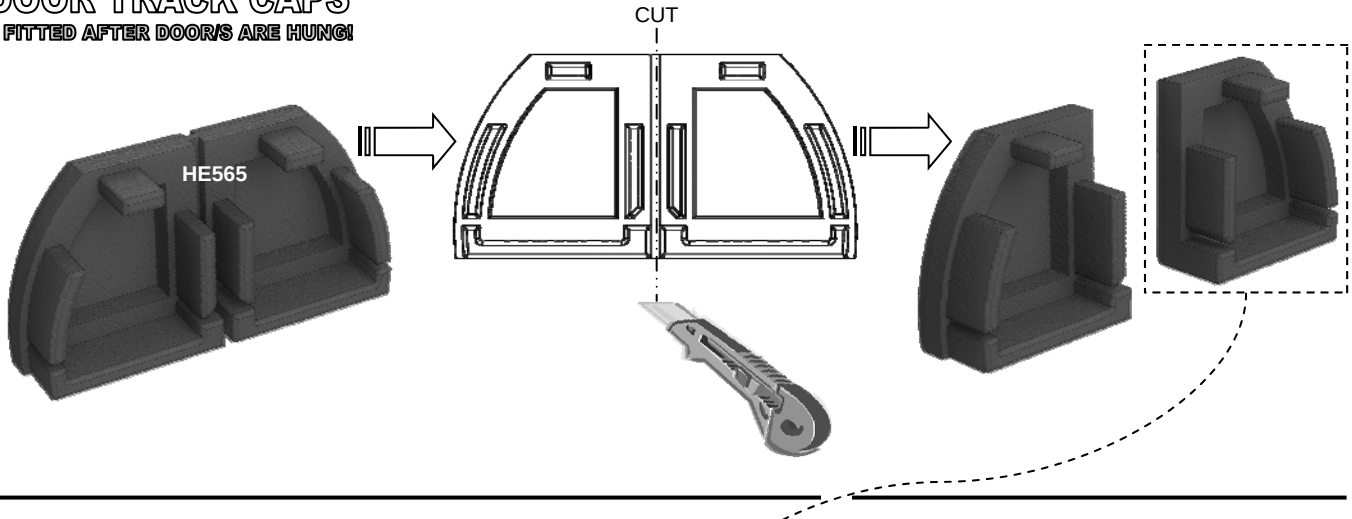

2.(nd)

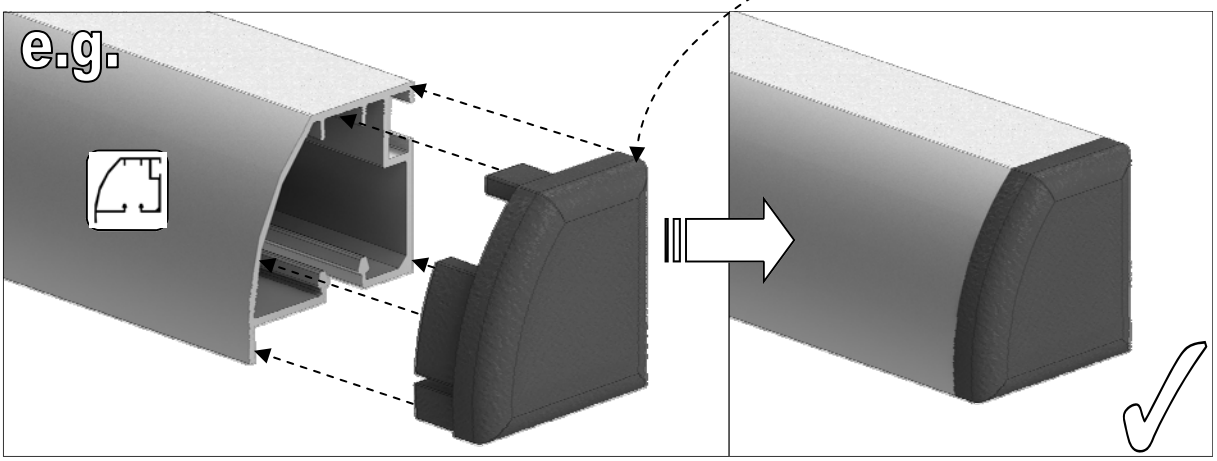

HE-GLO FRAME SMALLS INC. BASE						
Part No.	**Section**	**4'**	**6'**	**8'**	**10'**	**12'**
SYBOLM6 X11	10	103	119	131	145	155
SYBOLM6 X15	15	8				
SBOLM6 X11CROP		21	20	20	20	20
SYNUTM6		132	147	159	173	183
SYZCLIP		8	12	16	20	24
HE300/C		10				
SY613/C		4				
SY201/C		2				
SY200/C		4				
SYSMA VENT/C	VENT SMALLS	1		2	3	4
SY STAY/C		1		2	3	4
SYSCR2		10				
02-1825		2				
SYRAWL		12				
D250B (=100)		132	147	159	173	183
SY159/C		10				

DOOR PACK SMALLS						
Part No.	**Section**	**4'**	**6'**	**8'**	**10'**	**12'**
HE300/C		2				
SY616/C		1				
SY615/C		1				
HE384/C		2				
HE583		24				
HE565		1				
HE571		4m OF DRAFT EXCLUDER				
HE400/C		2				
HE560		2				
HE404/C		2				

5 GLOUCESTER packing List

No	mm	4'		6'		8'		10'		12'	
1	3720									2	PACKED SEPERATELY
2	3720									1	
3	3720									2	
5	3100							2	PACKED SEPERATELY		
6	3100							1			
8	3100							2			
12	2480					1					
14	2480					2					
17	2480					2					
21	1586	2		4		4		4		4	
25	1860			2							
26	1860			1							
27	1860			2							
47	1504	2		4		6		8		10	
55	1240	2									
57	1240	1									
58	1240	2									
76	1504	2		2		2		2		2	
77	1504	2		2		2		2		2	
85	622	1									
93	636			1		2		3		4	
121	619	1		1		2		3		4	
123	612	1		1		2		3		4	
124	610	2		2		4		6		8	

No	mm	4'		6'		8'		10'		12'	
170	1836	2		2		2		2		2	
171	1836	2		2		2		2		2	
172	1548	1		1		1		1		1	
174	1527	4		4		4		4		4	
175	1526	1		1		1		1		1	
176	1526	1		1		1		1		1	
177	1049	2		4		4		4		4	
178	925	2		4		6		8		10	
179	916	2		2		2		2		2	
180	916	2		2		2		2		2	
181	460	2		2		2		2		2	
182	460	2		2		2		2		2	
618	482	2		2		2		2		2	
1046	375	1		2		3		4		5	
		1		1		2		3		4	
		4		4		5		6		6	
SYBC(C/W)1210 (PLASTIC)	1210	12		16		20		24		28	
SYBC(C/W)1500 (PLASTIC)	1500	12		16		20		24		28	
SYBC(C/W)2000 (PLASTIC)	2000	6		6		6		6		6	

1 'BETA' Mini Double Door Box

1 smalls pack for relevant building

1 drop door smalls pack CASMA1

BOX PACKED BY .....