6′ Wide
AMATEUR CEDAR GREENHOUSE

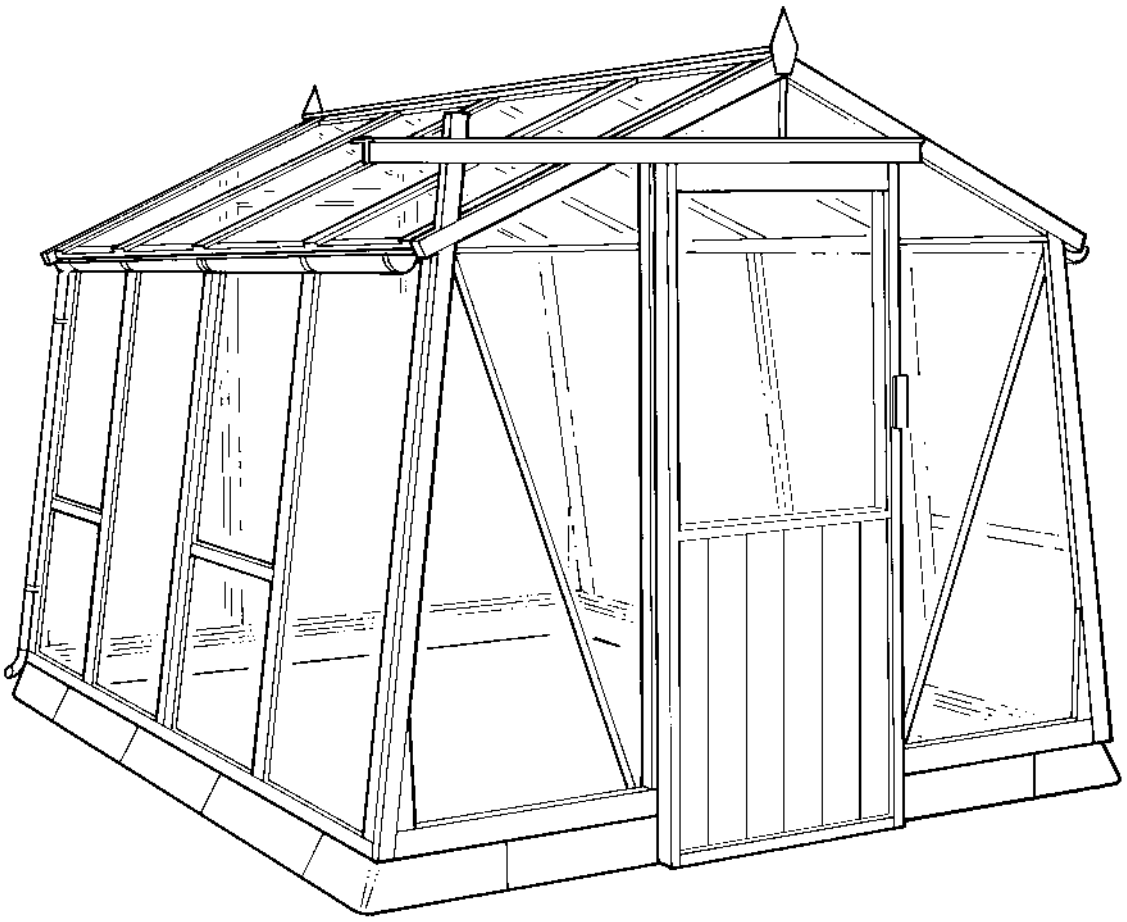

ASSEMBLY INSTRUCTIONS

PLEASE READ ALL INSTRUCTIONS BEFORE PROCEEDING

04/11

6' WIDE AMATEUR CEDAR GREENHOUSE
Assembly Instructions

Contents Page

YOUR NEW GREENHOUSE

Introduction *3*

Safety Advice *3*

Fitting Service *3*

Tools required to erect the Greenhouse *3*

Planning and Preparation *3*

Unpacking the Greenhouse *3*

OPTIONAL EXTRAS *4*

Louvre Vents, Extensions, Cladding,

Rainwater Adaptor Kit, Automatic Vent Openers

SITE PREPARATIONS

Siting your Greenhouse *5*

Site Preparation *5*

CONCRETE BASE KERBS

Base Kerb Dimensions *6*

Setting out the Concrete Kerbs *6*

FIXING TO CONCRETE KERBS

Fixing of Cills to Concrete Kerb *7*

Fixing End Gable and First Side Panel *7*

Fixing the Plain Gable End *8*

Fixing the remaining Side Panels *9*

Fixing Door End Gable *10*

ROOF

Preparation and Fixing of Ridge Bar *11-12*

Fixing of Roof Panels *13-14*

Fixing Roof Vents and Caps *14*

Fixing of Roof Fascias and Finials *15*

BRACING AND SUPPORTS

Bracing & Support *16*

Bracing & Support on models

exceeding 13' 7" / 3.96m *17*

DOORS

Fixing Single Door *18-19*

VENTILATION

Ventilation Options *20*

Louvre Vent Assembly and Fitting **OPTIONAL** *21*

GUTTERING

Standard Gutter Assembly and Fitting *22*

SHELVING AND STAGING

High Level Shelving *23-24*

Staging Assembly *25-26*

Glass details *27-28*

ALTON GREENHOUSES, Station Works, Fenny Compton, Southam, Warwickshire CV47 2XB
Telephone: 01295 770795

YOUR NEW CEDAR GREENHOUSE

Introduction

Thank you for buying an Alton Cedar Greenhouse. Please read carefully through these instructions before beginning to put your greenhouse up.

Optional Extras

It is extremely important that you assemble your optional extras in the correct position. Throughout these instruction references will be made to each optional extra. Please refer to the appropriate page or leaflet for full details.

Safety advice

It is advisable that the greenhouse should be assembled by two people. Particular care should be taken when handling glass and the wearing of gloves is strongly recommended. Favourable weather conditions should be chosen. Do not try to erect the building in windy conditions - the panels are difficult to handle in high winds.

All side frames should be suitably propped until the roof frames are secured.

Keep children and pets away until the work is finished.

Take your time - rushing causes accidents.

Fitting service

Please call your local dealer if you would like to have a quote for the erection of your greenhouse by an installer.

Tools required to erect the greenhouse

Drill & bits (for pilot holes), screwdrivers (for slot and posi-drive), spanners 10mm & 17mm, small hammer, pliers, spirit level, step ladder, tape measure, bradawl, mastic gun, saw & props.

Planning and preparation

All of the illustrations relate to a 10'6"/3.20m long Amateur Greenhouse. For other models you will have a greater or smaller number of Side and Roof Sections for your chosen model.

Before you commence assembly of the frame it is advisable to pre-determine the layout of individual sections to ensure the roof vents are in the position you require. Double roof sections must be positioned above double side sections, and single roof sections above single side sections.

If you do not want to cut one of the roof cover strips please avoid positioning a roof vent at either end of the greenhouse.

A bradawl or drill should be used to pilot all screw holes, especially on the shelving and staging, to help prevent the timber from splitting. Sometimes the pre-drilled holes in the frames can be blocked - simply insert a screwdriver to clear them.

Unpacking the greenhouse

Before removing all the packaging please note the individual named pieces of greenhouse. This is not only a convenient way to check you have all the correct sections, but also to help you when determining the layout and assembly of your greenhouse. You will also notice all fixtures, nails, screws, bolts etc., come pre-packed and labelled for your convenience. Keep these in their bags which will make identification easier.

If using a knife be careful not to cut into the cedar wood.

Future Reference

Please keep these assembly instruction safe as you may need them for reference in the future.

OPTIONAL ACCESSORIES

Get even more out of greenhouse

Alton have a range of accessories which will add extra benefits to your new Amateur greenhouse.

Many of the accessories can be brought when ordering your greenhouse - but may also be added at a later date.

If it is a possibility that any of the accessories will be added at a later date, due care and attention should be given at this stage to where the greenhouse is situated. eg space for extension to either end!

Louvre Vents

Extra side ventilation at staging height. Use in conjunction with roof and vent access promotes healthy air circulation. Can be used manually or with automatic openers.
To fix at a later date accessibility to both sides of the greenhouse is essential.

Extension Modules & Partitions

Simply extend your greenhouse - either or both ends - using a pre-treated extension module(s). You remove an end gable, bolt in the new extension, then replace the end panel. You may also consider a partition with your extension, giving an extra 'room' for your greenhouse.
When siting the original greenhouse, consider the space available for an extension at a later date.

Cladding

Alton Cladding is an 'instant fit' cedar wood cladding which simply clips over the outside of the greenhouse. Cladding to staging height gives maximum heat retention in winter and extra shade in the summer.

Accessibility all around the greenhouse is essential, to be able to fit and remove the cladding. Cladding can be bought and fitted to any side or end you wish.

Rainwater Adaptor Kit

An easy to fit adaptor kit to connect both sides of the guttering and to take the rainwater to one single point. Ideal for collecting rainwater - and within easy reach to water the greenhouse plants!

Automatic Vent Openers

Just set and forget. These units automatically open and close in response to climatic conditions. Can be used on roof or side louvre vents to give optimum ventilation.

Further Information

If you require further information on any of these Alton accessories please, in the first instant, contact your local Alton Stockist.

If this is not feasible, then please contact Alton Greenhouses direct, address details are on the back cover.

SITING YOUR GREENHOUSE

Siting your greenhouse

You may have already considered the position of your new greenhouse and be aware of the general guidance given. But it may be advisable to consider the following advice.

A flat level site is essential and further information on the preparation of the ground is given opposite.

It is necessary to leave sufficient working room around your greenhouse when you're putting it up and also to allow for the possible need to replace a piece of glass in the future. If possible try and leave a space of 2ft/610mm around the greenhouse.

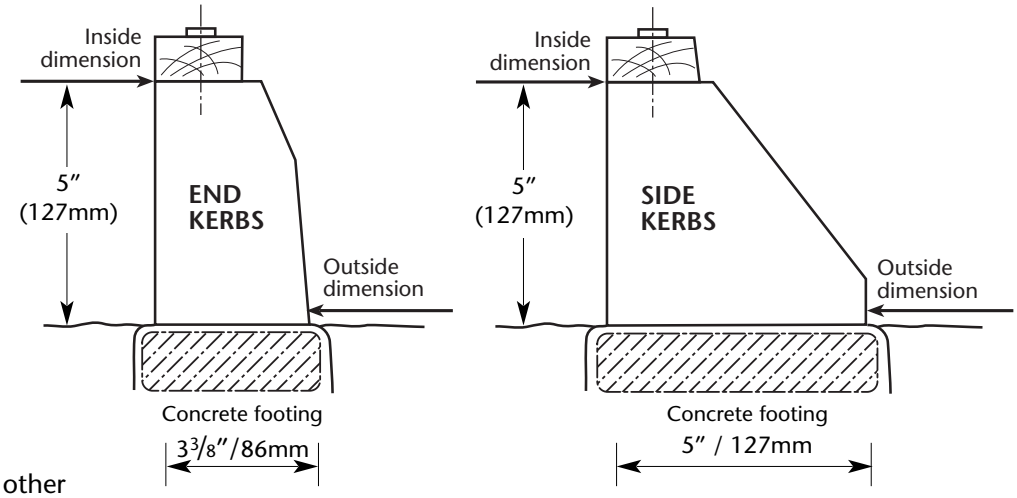

Locate the greenhouse where there is maximum amount of sunlight and avoid if possible any shade from trees, fences or other buildings. Over- hanging branches can be a particular nuisance and should be avoided.

Choose a site where the greenhouse is relatively easy to get to and convenient to bring water to and possibly a supply of electricity.

Finally, and most importantly choose a site where your Alton Greenhouse will look right so that it will complement to your garden.

Site Preparation

It is essential that the concrete base kerbs are laid on firm level ground that is unlikely to let the greenhouse sink into it after a number of years. If the site for the greenhouse is not firm, level or well drained, it is advisable to lay concrete footings as illustrated, or lay a perimeter row of paving slabs. The depth of footings will depend on the nature of the ground on your site. For practical purposes a spade's width and depth may be preferred.

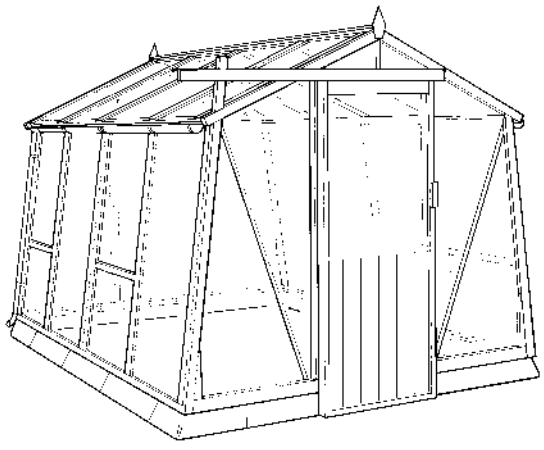

CONCRETE BASE KERBS

Base kerb dimensions

	INTERNAL DIMENSIONS			EXTERNAL DIMENSIONS		
Model	**Width**	**Length**	**Diagonal**	**Width**	**Length**	**Diagonal**
6'5" x 5'6"	5'10" (1778mm)	4'9" (1448mm)	7'6 1/4" (2293mm)	6'8" (2032mm)	5'3 3/4" (1619mm)	8'6 1/4" (2598mm)
6'5" x 8'0"	5'10" (1778mm)	7'3 5/8" (2226mm)	9'4 1/4" (2849mm)	6'8" (2032mm)	7'10 3/8" (2397mm)	10'3 3/4" (3142mm)
6'5" x 10'6"	5'10" (1778mm)	9'9 1/2" (2984mm)	11'4 3/4" (3474mm)	6'8" (2032mm)	10'4 1/4" (3156mm)	12'3 3/4" (3754mm)
6'5" x 13'0"	5'10" (1778mm)	12'4 1/8" (3762mm)	13'7 7/8" (4161mm)	6'8" (2032mm)	12'10 7/8" (3934mm)	14'6 3/8" (4428mm)
6'5" x 15'7"	5'10" (1778mm)	14'10" (4521mm)	15'11 1/4" (4858mm)	6'8" (2032mm)	15'4 3/4" (4693mm)	16'9 3/4" (5114mm)
6'5" x 18'0"	5'10" (1778mm)	17'4 5/8" (5299mm)	18'4" (5589mm)	6'8" (2032mm)	17'11 3/8" (5471mm)	19'1 3/4" (5836mm)
6'5" x 20'7"	5'10" (1778mm)	19'10 1/2" (6058mm)	20'8 5/8" (6314mm)	6'8" (2032mm)	20'5 1/4" (6229mm)	21'6" (6552mm)

Setting out the Concrete Kerbs

The kerbs should be laid out according to the internal dimensions for your particular model. The dimensions are given above. Check the diagonal measurements both ways to ensure squareness.

As a result of the manufacturing process the kerbs can in some cases be uneven on the underside and may need to be bedded on a dry sand/cement mix to correct any inaccuracy.

Each kerb has a number stamped on it to help you identify it and relates to the plan below. The plan shows the position of each kerb.

The ends are the same for all models but the quantity of kerbs (Ref 756) for the sides varies with the particular length of model. The example layout below is for a 6'5" x 10'6"/2.43m x 3.20m model.

The corner kerbs should be positioned with the sloping side at the side of the the greenhouse and the vertical side to the front or back.

Please note that gaps between the concrete kerbs are normal and these should be grouted after erection of the greenhouse has been completed.

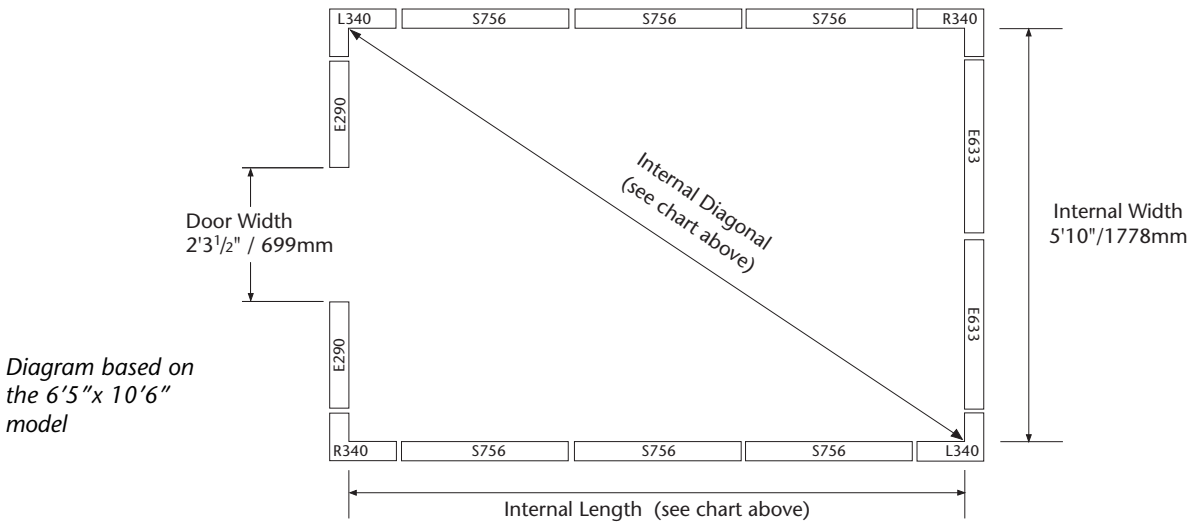

Diagram based on the 6'5"x 10'6" model

FIXING TO CONCRETE KERBS

Fixing of cills to concrete kerbs

Layout the wooden cills in position making sure the side cills bevelled edge faces **outwards** from the building.

There is no bevel on the gable end cills. They should be positioned with the slots closest to the outside.

Loosely fix the cills with the M10 x 50 coach screws (50mm long) and washers. Use the slots for any adjustment. See fig 1. Ensure that the side cills are butted up to and are square to the end cills. It is worth checking again the diagonal measurements.

When all in position and square, tighten the bolts down with a 17mm spanner.

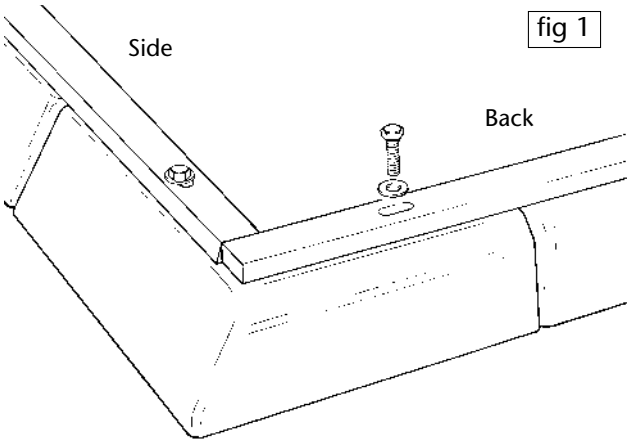

fig 1

Fixing end Gable and the first side panel

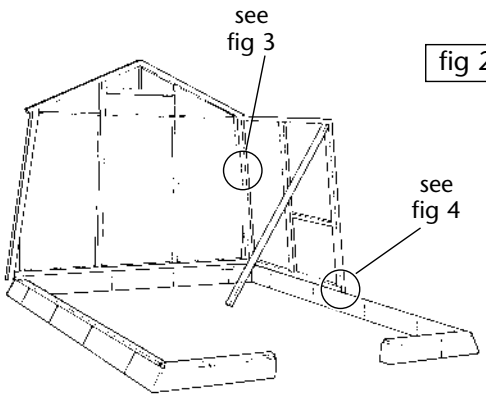

fig 2

The bolts for fixing the frames are different lengths and are for specific locations. Washers should always be fitted before the nut is put on. Please note that, when a low level vent is fitted adjacent to the gable end, that the bolts have to be reversed and plastic caps are provided to cover the exposed nuts on the outside of the gable end.

Prior to commencing the assembly of the sides gather together all the necessary bolts, washers, nuts, brackets & screws that you see identified. The quantity will vary depending on the length of the model.

It's best to start with the plain gable end and side panel as shown in fig 2. Offer the end and side section to the cill being sure to rest both sections on the top edge of the concrete and against the outside edge of the cill. See fig 4 on page 8.

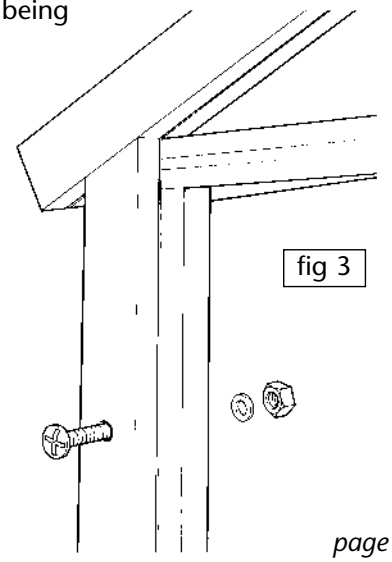
fig 3

FIXING GABLE END & SIDES

Fixing plain gable end and side panels

Fix the sections together with 3 off 3⅜" (85mm) bolts, washers and nuts as shown in fig 5. It's a good idea to prop the side section safely.
See fig 2.

fig 4

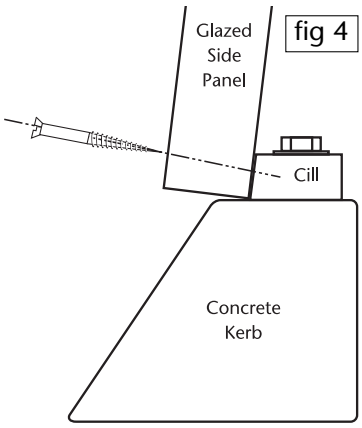

Secure each section to the cill with a 2" (50mm) screw through each pre-drilled hole at the bottom of the section. See fig 4 and fig 8 on page 9.

Next fix a side section to the other side of the gable.

If in fixing a side section to the gable end the side vent is adjacent to the gable, the bolts must be reversed so it's head is inside the channel of the lift up vent.

See fig 5. Use 3 off 2¾"/70mm bolts, washers and nuts plus 3 plastic nut covers.

The lift up vents will require the transit blocks to be removed to give access to all the fixing holes. Check the glass slides up and down without hitting the bolt heads.

Note: ***It is correct that the end of the side section does not line up flush with the gable end.***

fig 5

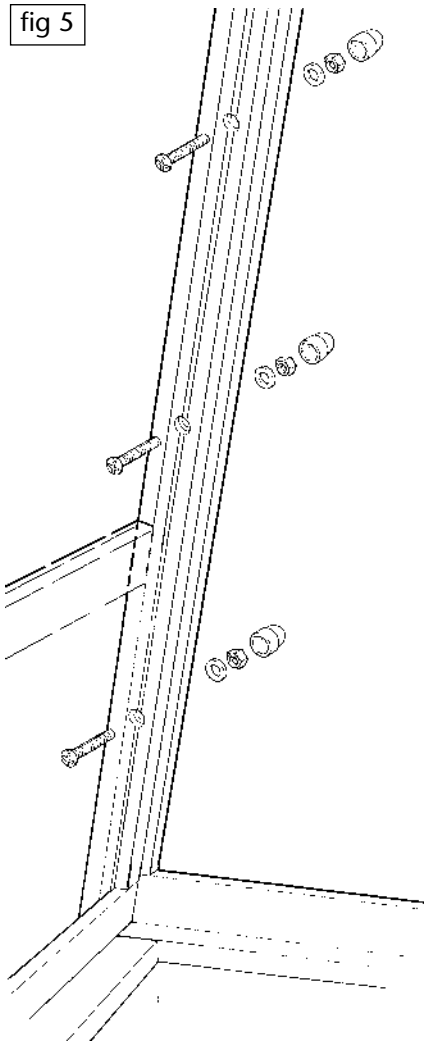

FIXING SIDE PANELS

Fixing the remaining side panels

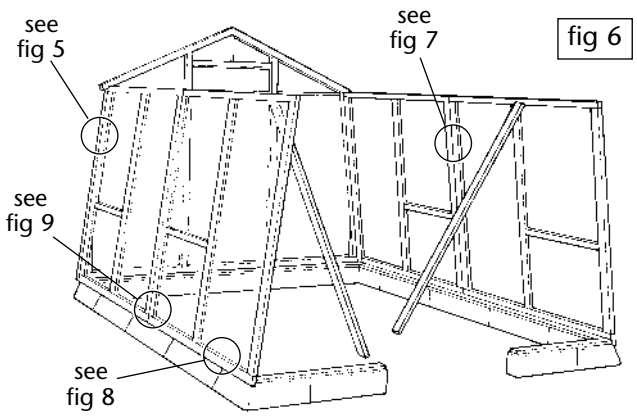

fig 6

Repeat the same procedures for fitting the remaining side sections in place. Where side sections meet each other use the shorter 2 3/8" / 60mm bolts and fix with a washer and nut, as shown in fig 7. Remember to ensure the bolt head is inside the channel of the lift up vent.

Continue to prop the sides as you progress.

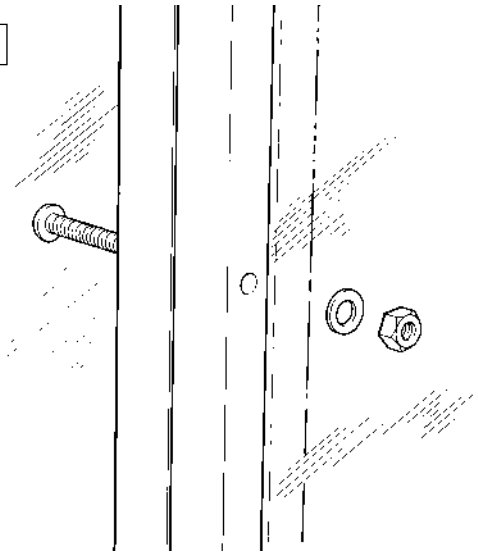
fig 7

Remember to fix the panels to the cills as before with a 2"/ 50mm countersunk screw though each pre- drilled hole, as shown in fig 8.

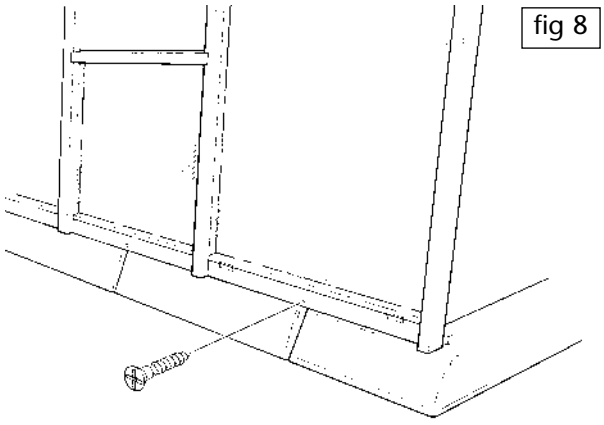
fig 8

Fix the plastic tongue in the slot between the side panels. This may be done from either the top or bottom. See fig 9. Bend the plastic tongue over on itself when you push the end into the slot. This will prevent it from sliding back out. You may find it easier to accomplish this by gripping the folded end with a pair of pliers.

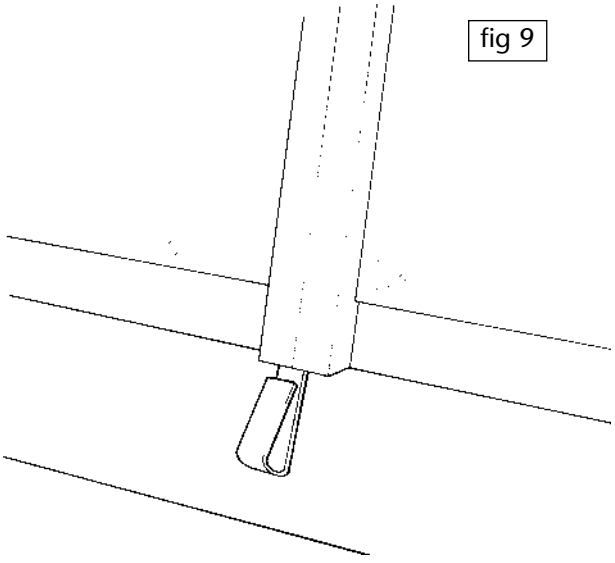
fig 9

FIXING DOOR END GABLE

Fixing Door End Gable

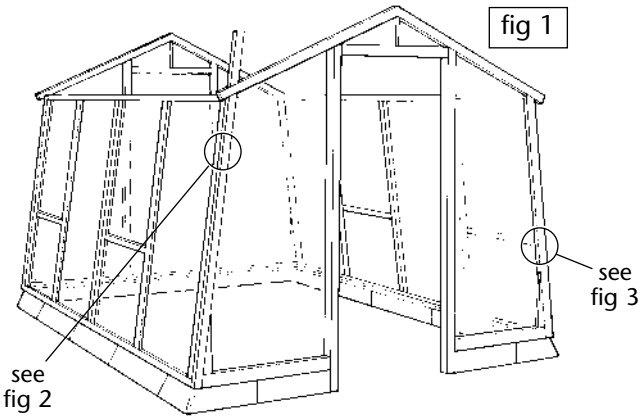

Having fixed all the side sections offer the door gable end section to the assembly, having first removed the transit strap at bottom of door way. Fasten door gable end with 6 off 3⅜"/85 mm bolts, washers and nuts through the pre-drilled holes. See fig 2.

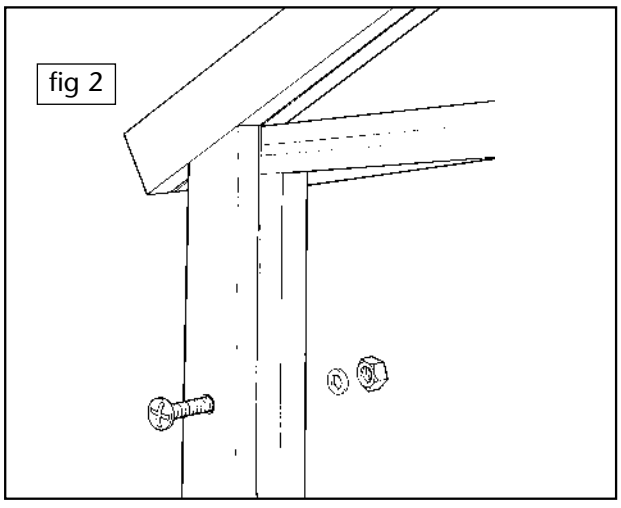

Fix door gable end to the cills with 2" / 50mm countersunk screws through each pre-drilled hole.

If the side vent is next to the door gable the bolts must be reversed as shown in fig 3. Use 3 off 2¾"/70mm bolts, washers and nuts plus the plastic covers.

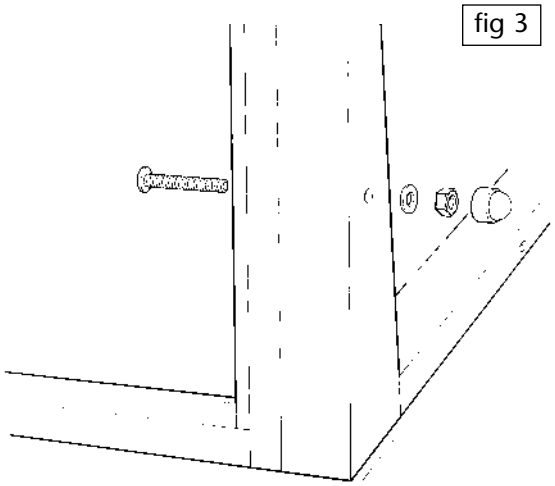

RIDGE BAR

Preparation and Fixing of Ridge Bar

On models over 13'/3.96m the ridge may be supplied in sections. Lay them upside down on level ground and join them by overlapping the cut ends and securing them with the metal channel which is fixed with 4 off 1¼"/32mm countersunk screws. See fig 2.

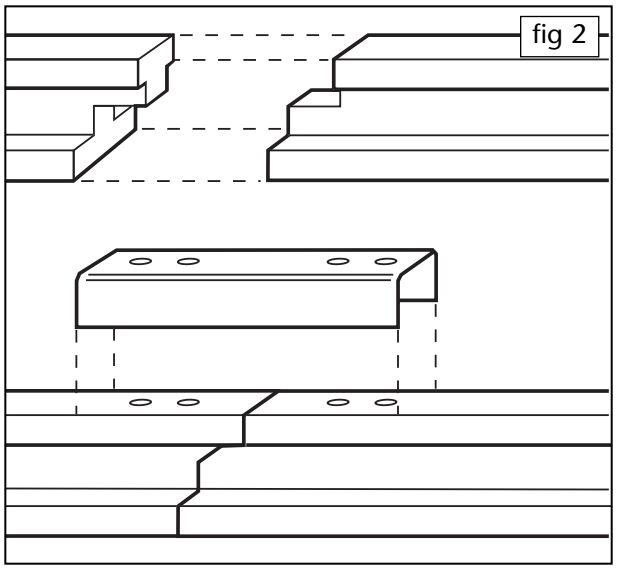

On all models mark the positions of the "U" shaped ridge brackets on the underside of the ridge bar. Position the brackets along the ridge bar as indicated in fig 3.

Measure
a -1'5"/432mm in from each end and
b - 2'6⅝"/778mm between each bracket.

Drill pilot holes **and fix the brackets loosely** with 1¼"/32mm screws. The number of brackets varies with the length of greenhouse. See fig 4.

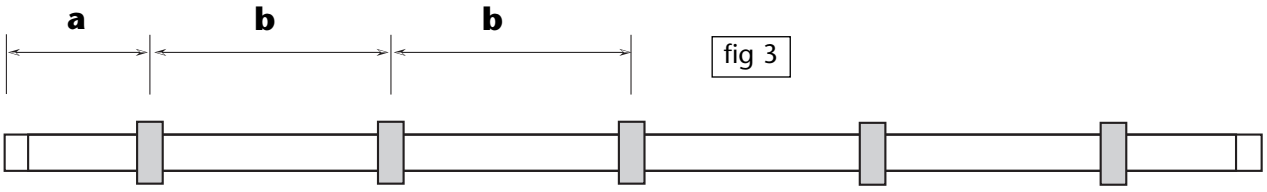

fig 3

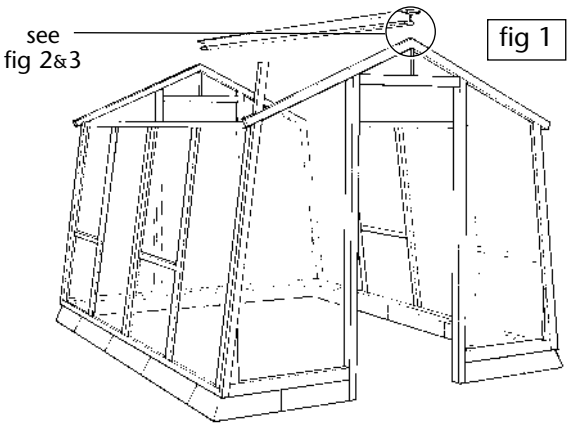

fig 1

Once the ridge bar and roof panels are in the final positions - then you will be required to tighten the ridge brackets. See page 13.

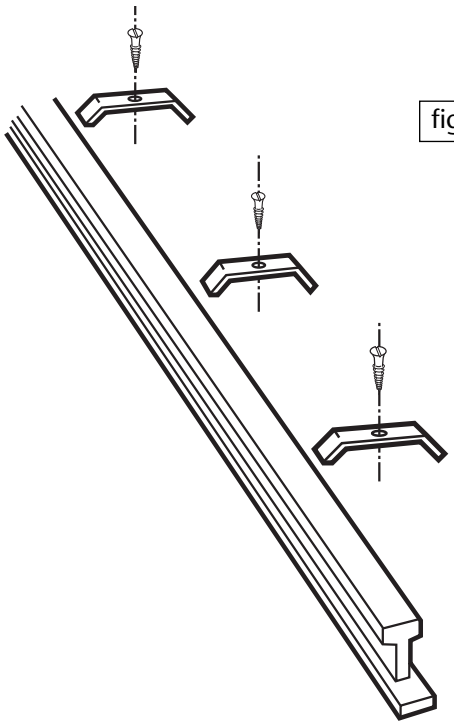

fig 4

RIDGE BAR / ROOF PANELS

Preparation and Fixing of Ridge Bar

Apply the sealing mastic to the ridge, either when its fixed in position or now while it's still on the ground. A Mastic Gun is required and the nozzle should be cut to provide a $^{5}/_{8}$"/15mm bead which is applied to the inside top edge of the ridge bar. See fig 5.

fig 5

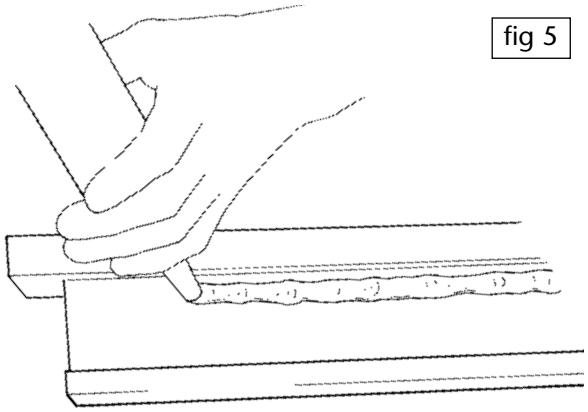

With assistance, offer the ridge bar to the assembly and fix with a $2^{1}/_{2}$"/64mm counter-sunk screw at each end. See fig 6.

fig 6

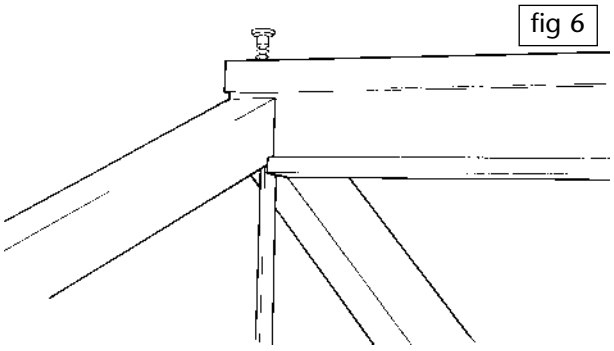

On any ridge board longer than 8'0" it is essential to prop it at the centre for the duration of the assembly.

It is beneficial on the longer buildings to prop the ridge to the extent that it has a small upward curve in it.

Fixing Roof Panels

Prior to commencing the assembly of the roof gather together all the necessary bolts, washers, nuts, brackets and screws that you require for this part of the assembly.

1"/25mm Round head screws
$3^{3}/_{8}$"/85mm Bolts, washers and nuts
$1^{1}/_{4}$"/32mm Countersunk screws
2"/50mm Countersunk screws
$2^{3}/_{4}$"/70mm Bolts, washers and nuts
Galvanised Roof vent nails
Plastic tongue · Eaves brackets

The quantity will vary dependent on the length of the model.

Double roof sections must be positioned above double side sections, and single roof sections above single side sections.

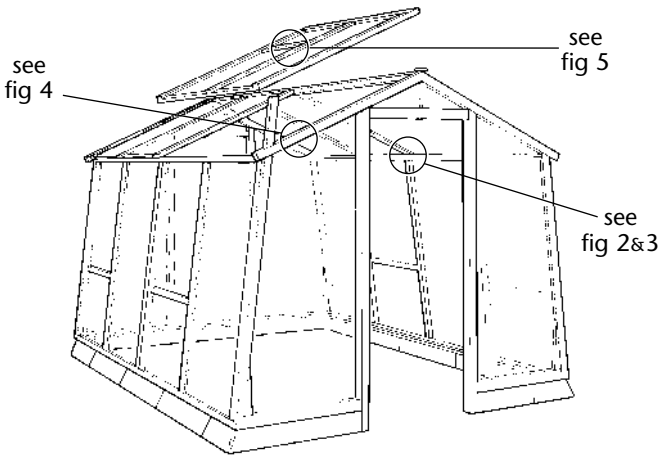

First fix the eaves brackets to the roof sections. They are required on each roof section except where adjacent to the gable ends. See figs 2/3.

fig 2

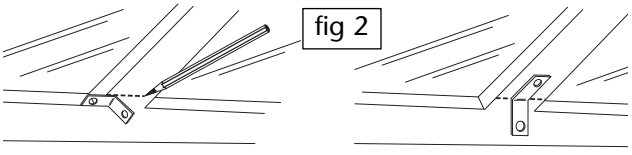

ROOF PANELS

Fixing Roof Panels

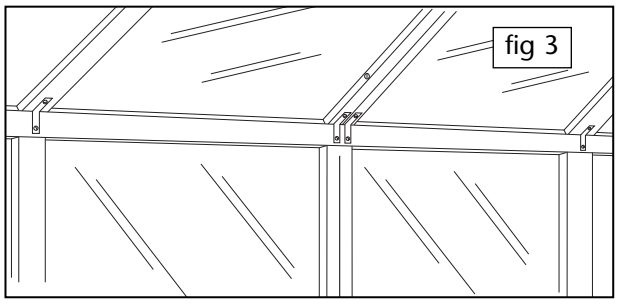
fig 3

Refer to fig 2 (on page 14) and position the bracket so it's lined up with the inside edge of the eaves rail of the roof section and mark along the upper edge of the bracket. Position the bracket in the centre of the style and line up the bend with the mark. Secure each bracket to the roof section with a 1"/25mm round head screw.

Offer up the first roof panel. Align with holes in the gable end by inserting a screwdriver though the holes. Fix the gable end to the roof panel by inserting $3^{3}/_{8}$"/85mm bolts from the outside through each hole. Fit washer and nut on the inside. See fig 4.

Fix the other end of the eaves bracket with a 1"/25mm round head screw into the top of the side panel. See fig 3.

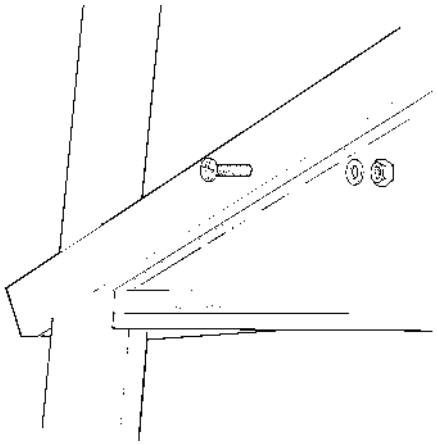
fig 4

Now repeat the above with the roof panel on the opposite side of the greenhouse.

When they are both in place with all bolts and screws fitted you can tighten the screws holding the ridge bracket to the ridge. **Before fully tightening ensure the roof panels are pushed tight up against the ridge.**

If either of these roof sections contain an opening for a roof vent it must now be fitted.

Position the roof vent centrally and secure with 3 off 2"/50mm countersunk screws through the pre-drilled holes. See Fig 5.

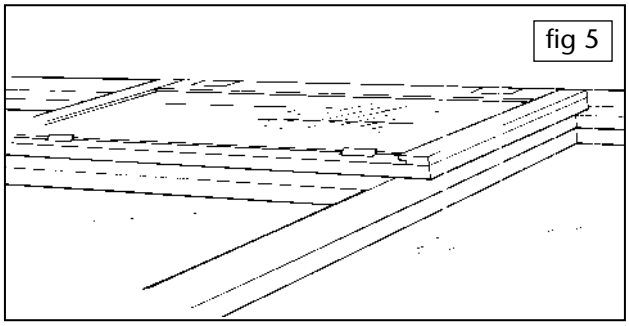
fig 5

Now fit the roof vent cap above the vent.
Fit the vent cap with the drip rail side above the vent and the other side flush to the edge of the ridge. See figs 6 and 9 for reference and secure with nails from the roof vent kit.
Important - see next page if you have adjacent roof vents.

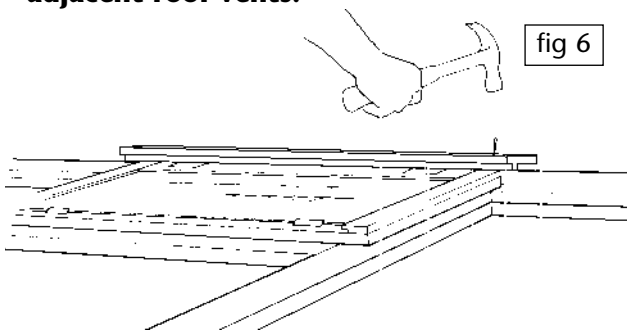
fig 6

Fixing roof Vents and Caps

If you have roof vents adjacent (either side) to each other you will have to trim the vent caps as detailed in fig 7. Note: if you have more than one set of adjacent roof vents, these will require cutting at both ends

fig 7

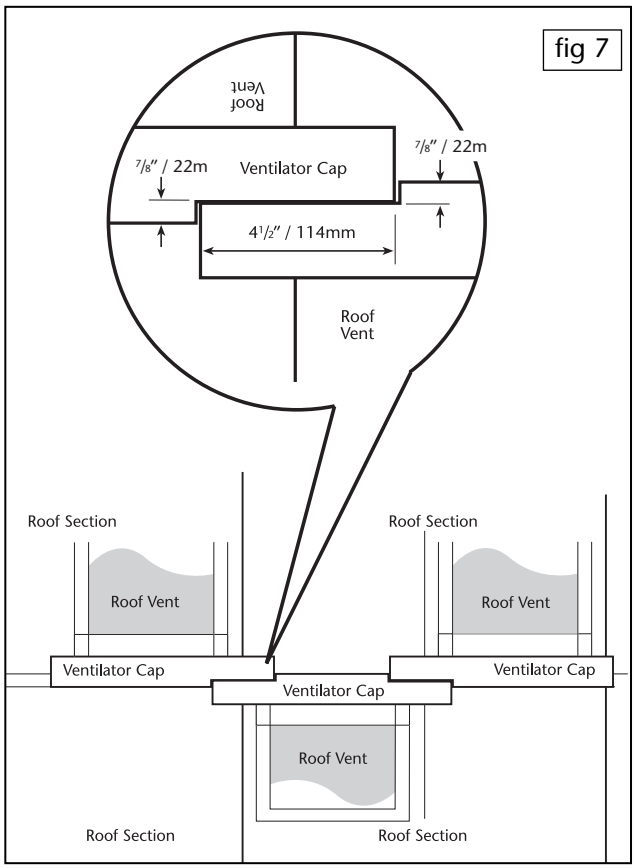

Leave the casement fittings or automatic openers until later.

Follow the same procedures for fitting the remaining roof sections in place.

Where roof sections meet each other use the shorter 2 3/4"/70mm bolts and fix with a washer and nut.

Fit any other roof vents and vent caps.

fig 8

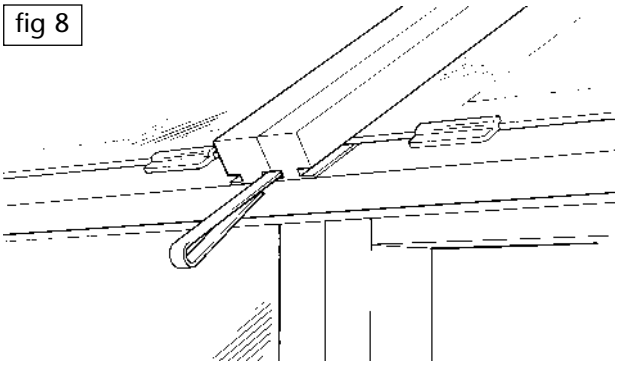

Fix the plastic tongue in the slot between the two roof panels. See fig 8.

Bend the plastic tongue over on itself when you push the end into the slot. This will prevent it from sliding back out and you may find it easier to accomplish this by gripping the folded end with a pair of pliers.

Note: It is correct that the end of the roof section does not line up flush with the gable end.

Finally check that all nuts and bolts are tightened before proceeding to the next instruction.

fig 9

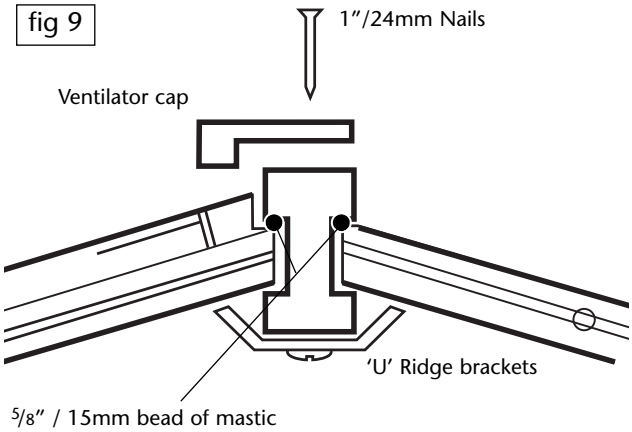

ROOF FASCIAS & FINIALS

Fixing the Roof Fascias and Finials

The gable roof cover strips (4) should be fitted next. At the door end you will need to cut out the necessary gap for the door post.

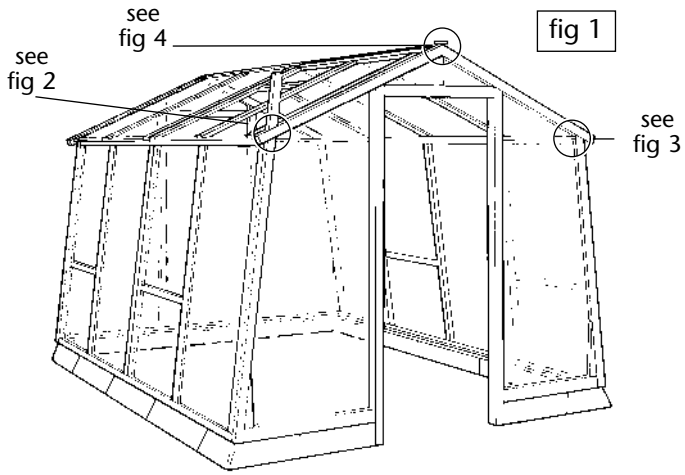

fig 1

Offer up the strip to mark off the correct amount to be carefully cut out.

Then fix with 1"/ 25mm nails, use 5 per strip. See fig 2.

Fix the remaining roof cover strips as shown opposite in fig 3.

If you have a roof vent adjacent to the gable you will have to cut away part of the strip to allow the vent to close. Take care when cutting not to split the cover strip. Again offer it up into position to establish the amount you need to remove.

Attach the finials to each gable end with 2 off 1"/ 25mm nails each. See fig 4.

NOW remove the transit bars from both gable ends

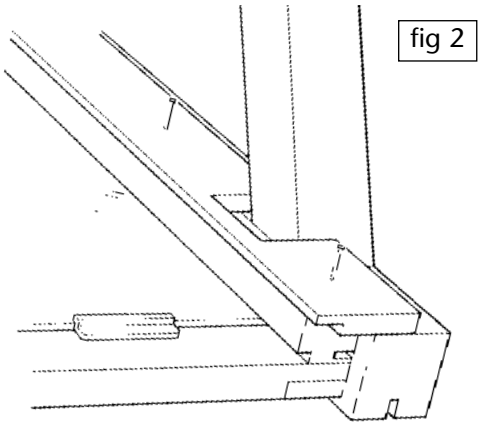
fig 2

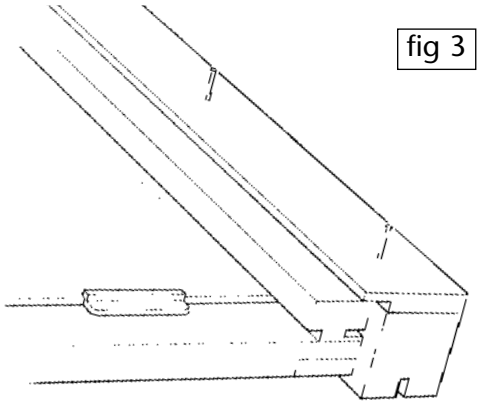
fig 3

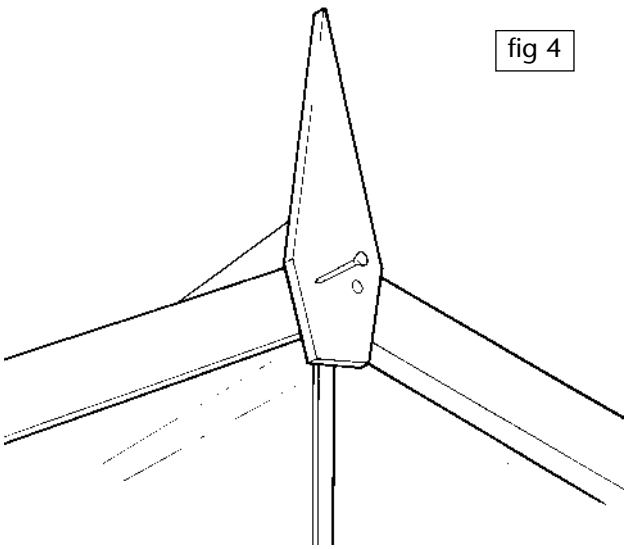
fig 4

BRACING & SUPPORTS

DIFFERENT BRACING AND SUPPORT METHODS ARE REQUIRE FOR DIFFERENT LENGTHS OF GREENHOUSE, PLEASE READ CAREFULLY BEFORE PROCEEDING

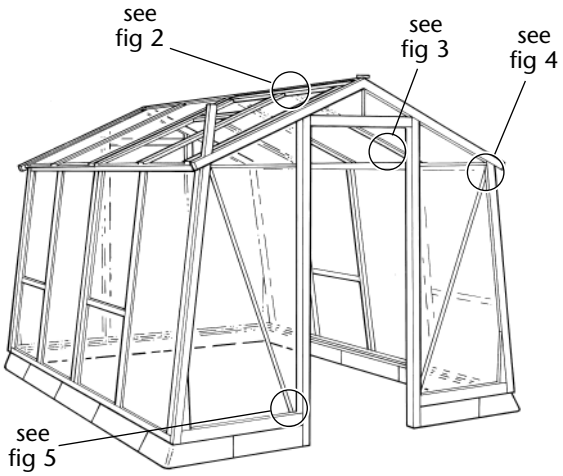

BUILDINGS 10' / 3.05m AND LONGER

Fix the ridge braces to every glazing bar except at the gable ends. These are 2'/610mm in length and should be positioned centrally and secured with 4 off 1"/25mm 8 gauge pan head screws for each. See fig 2.

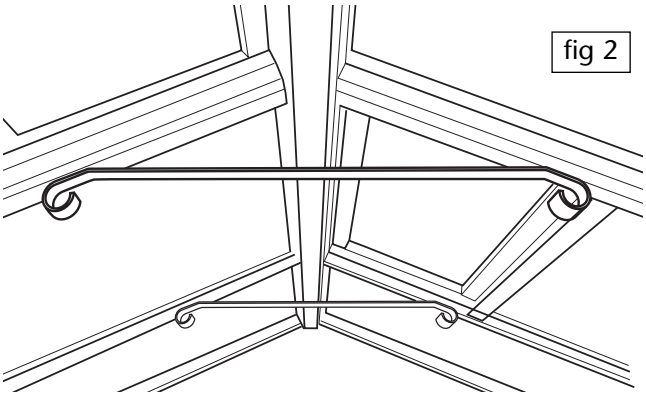

Fix the eaves braces on every glazing bar except at the gable ends as shown in fig 3. These braces are 1'10" / 560mm in length and are secured by 4 off 1"/25mm 8 gauge pan head screws.

Measure a distance of 12¼"/312mm down from the top of the side section to get the correct position of the end of each brace.

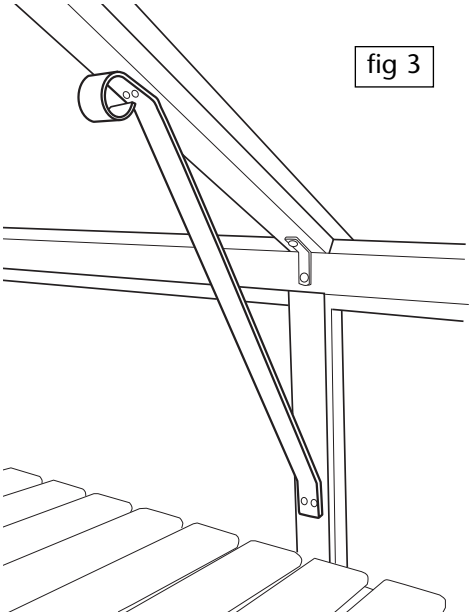

Gable end braces are fixed as shown in fig 4 & 5. Double check the verticals before securing with 1¼" / 32mm countersunk screws as shown.

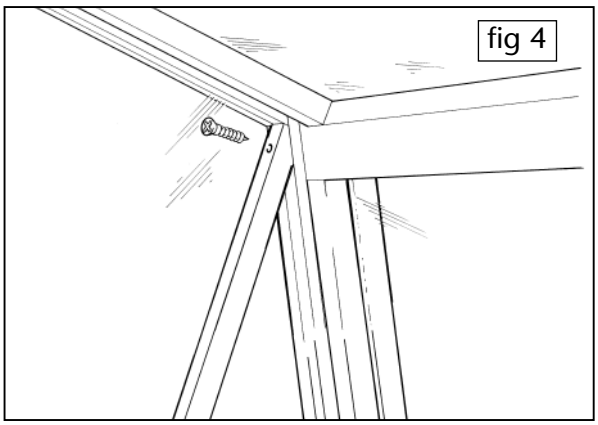

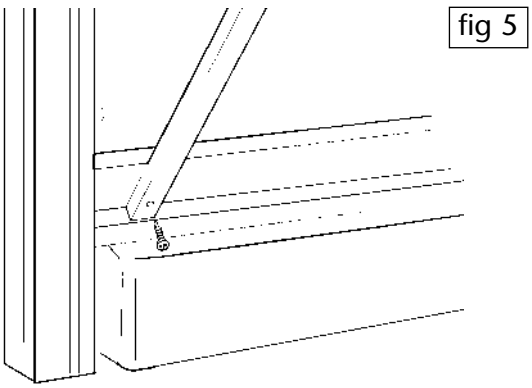

BRACING THE GREENHOUSE

Bracing the Greenhouse on models exceeding 13' / 3.96m

IF YOUR GREENHOUSE IS LONGER THAN 13'/3.96m please also refer to the instructions on this page, regarding Middle Braces and Double Braces.

fig 1

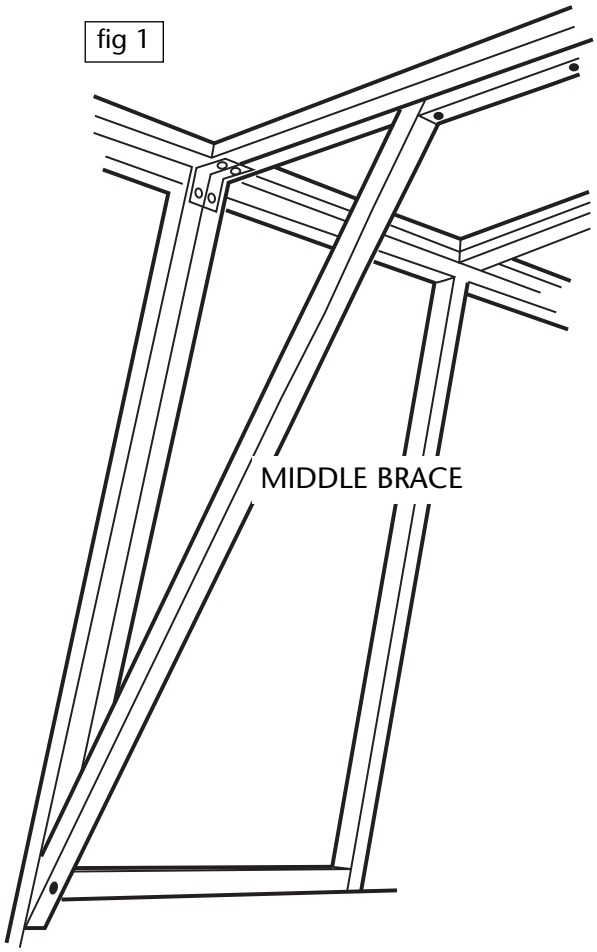

ON ALL MODELS 15' 7"/ 4.75MM a MIDDLE BRACE is fitted instead of a standard brace at every roof/side section join. See fig 1. Standard eave braces are fitted (on all models) to all other glazing bars except at the gable ends.

Fix middle brace at the top and bottom with 1½" /38mm countersunk screws to the roof and side cill, in the pre-drilled holes. The base of the middle brace is shaped to partially fit over the top of the cill.

Next move the short double bevelled block up to the top of the middle brace and the rafter. Holding it tightly in position secure with two 1¼"/ 38mm countersunk screws.

SINGLE DOOR

Fixing the Single Door

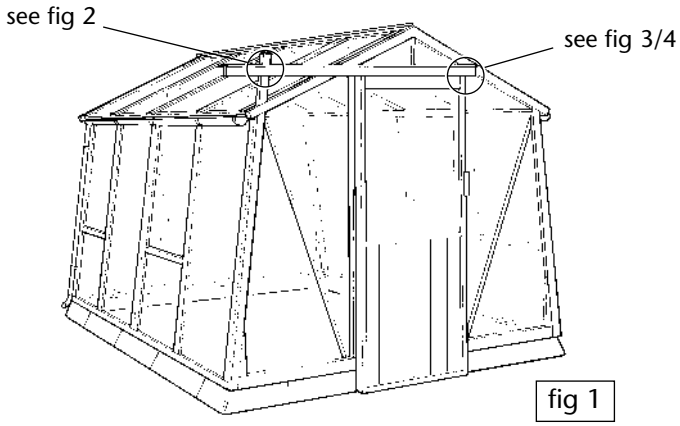

fig 1

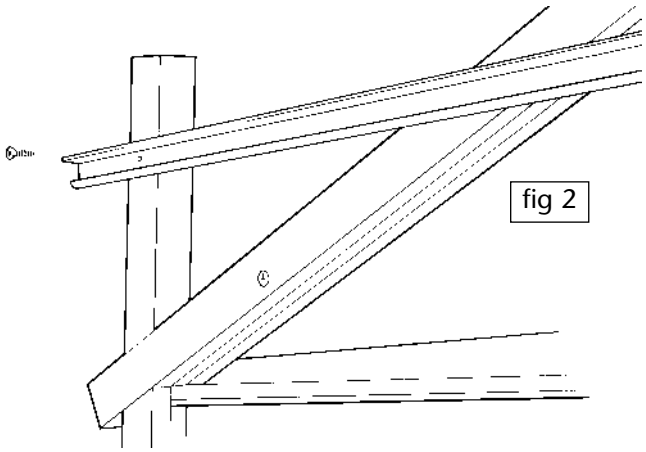

fig 2

To help you get the correct clearance under the door it can help to lay the timber door stop (slamming strip) on level ground at the door entrance so the under side is level with the bottom of the kerbs. If you then stand the door on the strip this will give you clearance of about $^{3}/_{8}$" / 10mm beneath the door.

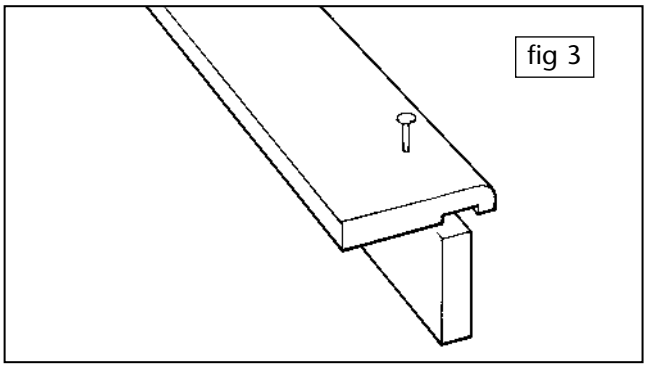

fig 3

Check with a spirit level that the door is vertical and then hold the metal top door track in position and mark its location on the frame.

Take the door away and fit the metal top door track. Ensure the right hand end lines up with the outside edge of the door post and fix with 4 off 1"/ 25mm countersunk screws as shown in fig 2.

Assemble the door pelmet with 6 off 1"/ 25mm) nails as shown in fig 3 being careful not to split the timber. Secure the pelmet to the metal top door track using 4 off $^{1}/_{2}$" / 12mm countersunk screws as in fig 4.

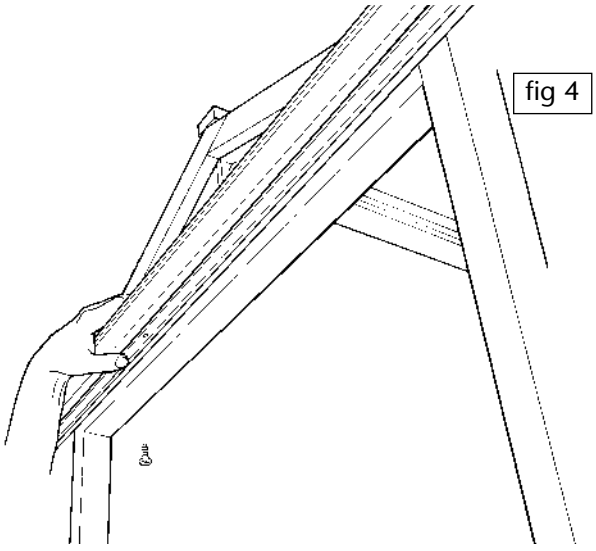

fig 4

Slide the door into position on the door track.

SINGLE DOOR

Fixing Single Doors · Handle + Staple

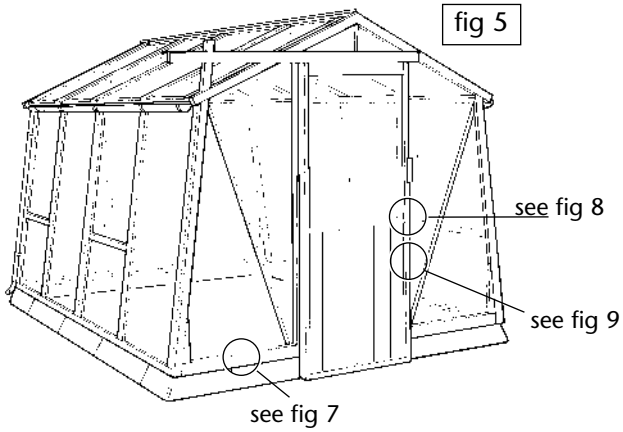

Positioning of the metal bottom door guide is important. The door must not rest on the guide, it must hang by the rollers in the top track and have a clearance between the door and the bottom guide rail. Fix into position with 2 off 3/4"/19mm countersunk screws. See fig 6 & 7.

Position the metal door stay as shown in fig 8 so that when the door is closed it lines up with and covers the end of the channel cut into the door. Fix with 2 off 3/4"/19mm countersunk screws.

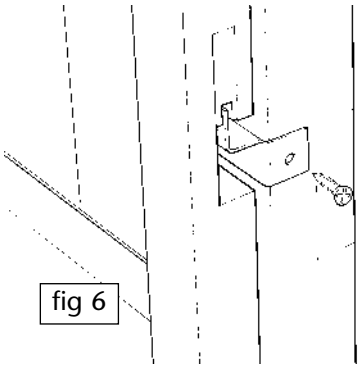

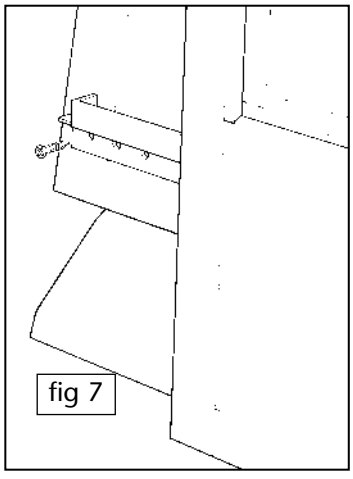

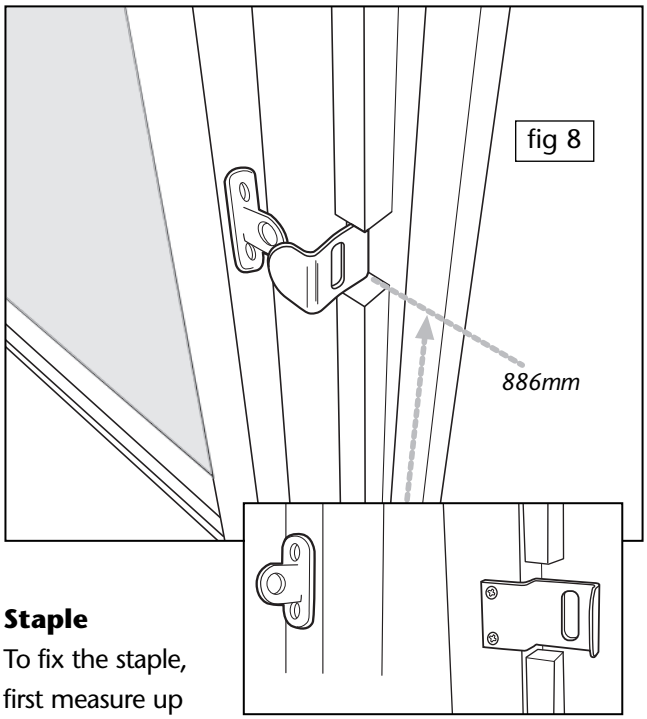

Staple

To fix the staple, first measure up from the bottom of the door post 886mm. Now fix the door catch above this mark using 3/4" roundhead screws. When fitted, close the door and then attach the timber door stop under the catch and tight against the door, the same process can be repeated above the catch but this may require trimming to suit.

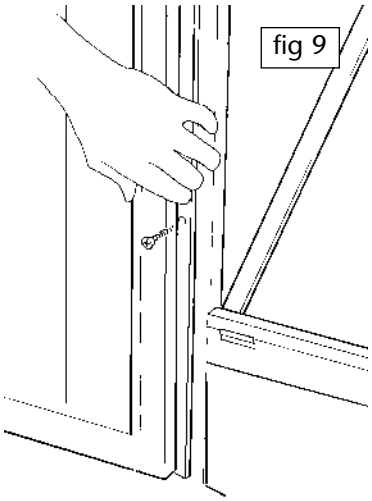

The staple can now be fixed to the door. Line-up the staple with the door catch and mark the screw holes. Fix with two 1"countersunk screws (see diagram).

DOOR HANDLE

Fixing the door handle

To fix the new handle, decide on your preferred position and hold the handle to the frame while you drill two 5mm screw holes into the door frame. Where the drill has marked the inside of the handle drill two small pilot holes. This will help the screws locate.

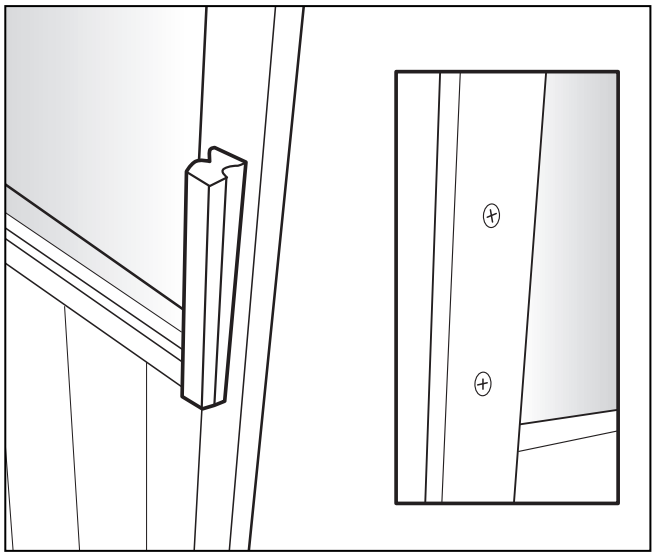

Secure the handle with two 2" countersunk screws

VENTILATION

Ventilation Options

fig 1

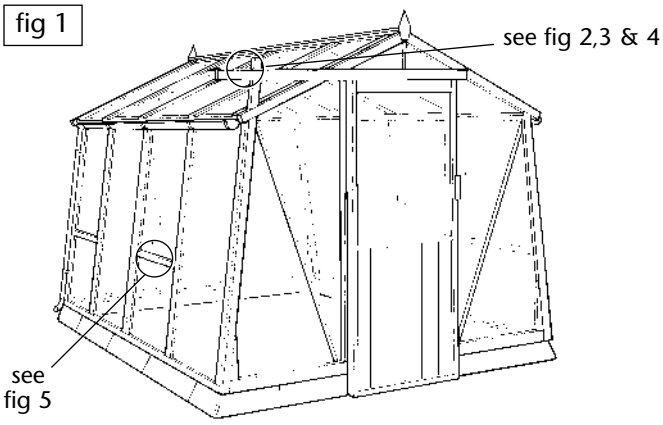

If you have not ordered an Automatic Opener as an optional extra we supply a casement stay for each roof vent.

With the roof vent closed fix the casement stay centrally to the roof vent with 2 off $^{3}/_{4}$"/ 19mm countersunk screws as shown in fig 2.

Locate the positions of the two studs with reference to the casement stay. Note the position of the 'offset stud' and the 'central stud' from fig 3. When your happy they are in the correct position fix with $^{3}/_{4}$"/ 19mm countersunk screws.

We do not supply a casement stay when an Automatic Opener is supplied.

To fix an Automatic Opener refer to fig 4 plus the separate instructions supplied with the unit.

To be able to open the ventaccess, refer to fig 5 and fix a $1^{1}/_{4}$"/ 32mm round head screw centrally in the timber bar, so that about $^{1}/_{2}$" / 12mm is left showing. (If the screw is put in too far it will not hold the handle, also it will come through the timber bar). Repeat above to each of the lift up side vents. Fit the spring to the vent handle and fit the handle to the clip.

fig 2

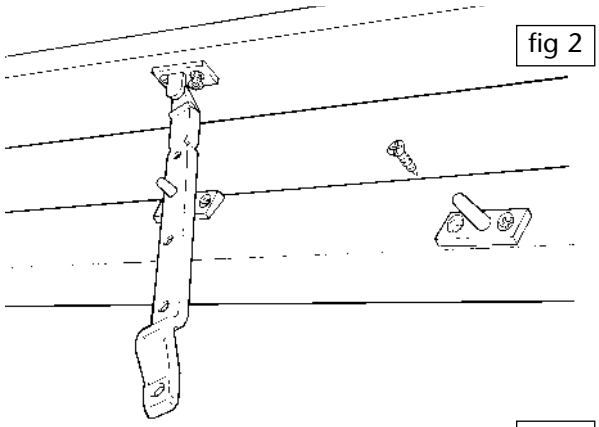

fig 3

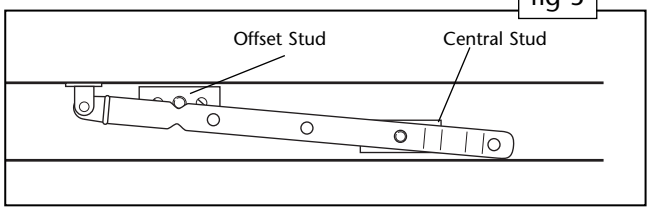

fig 4

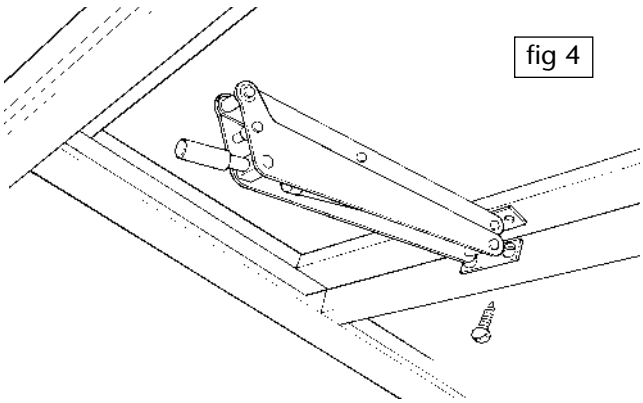

fig 5

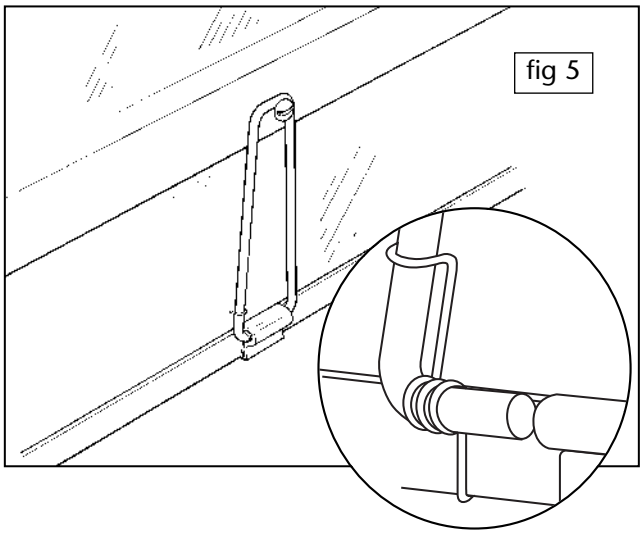

LOUVRE VENTS

OPTIONAL

Louvre Vent Assembly and Fitting

Louvre vents are fitted at staging height and are positioned to complement other ventilation available: eg ventaccess and roof vents.
They can only be fitted where the glass you are replacing is 730 x 1422mm.

First, carefully remove existing sheet of glass from the chosen panel by removing the glazing beading and the two brown glass stops. Support the glass at the bottom, then gently remove the glass by initially moving to the left. Put safely to one side. Remove centre nut and bolt from side section.

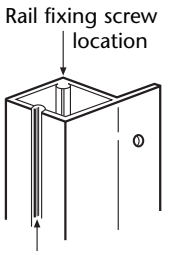

fig 1

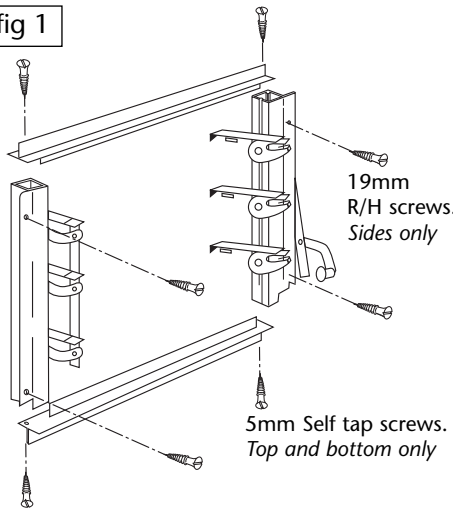

Assemble the louvre vent, as fig 1. Leave out the glass panels.

Measure 21"/535mm for top of panel. See fig 2.
Insert the louvre top rail into the top cill channel until fully home. Together with the top sheet of glass ($18^1/_2$" x $28^1/_4$" / 470 x 730mm) offer up to the section so that the bottom of the top louvre cill is at 21"/535mm. See fig 3. At this stage mark screw locations of vent, make pilot holes with bradawl/drill. Secure with $^3/_4$" / 19mm roundhead screws provided.

Fit bottom cill onto the louvre vent bottom rail.

Place bottom sheet of glass in position, pushing gently upwards to ensure a good fit and make secure with brown glass stops and replacing the glazing beading. See fig.4.

Finally open louvre to the horizontal position and insert glass blades, (4mm thick). Secure by bending lips up. (Use pliers if necessary).

The fitting of automatic openers can be done at this stage. Please follow the instructions that come with the unit.

fig 2

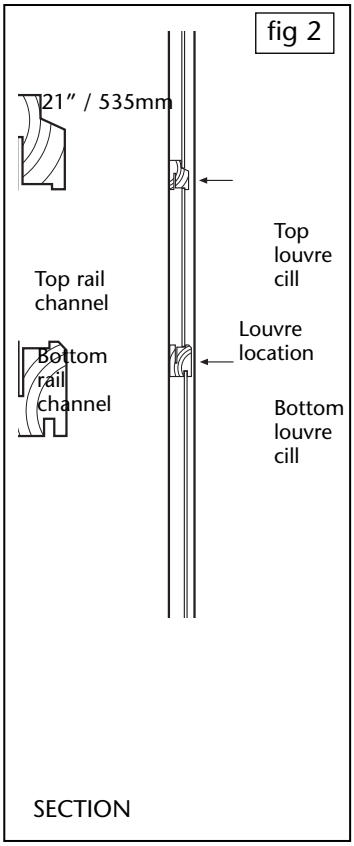

fig 3

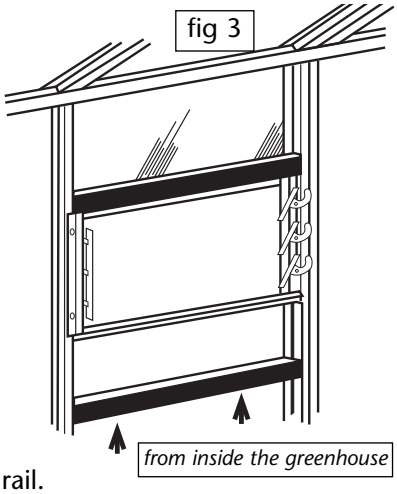

fig 4

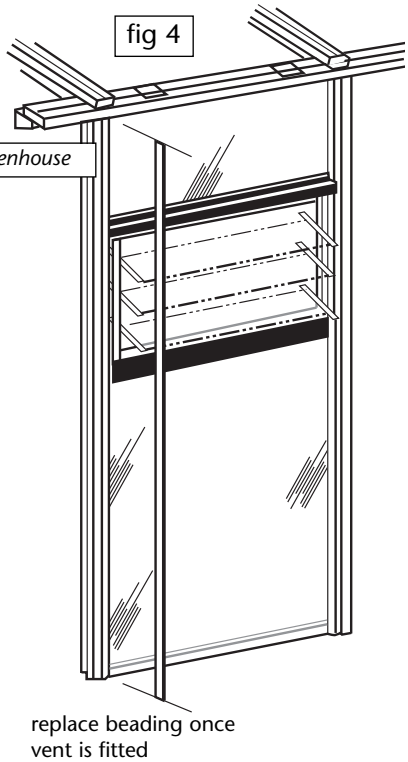

GUTTERING

IF YOU HAVE A RAINWATER ADAPTOR KIT, PLEASE SEE SEPARATE INSTRUCTIONS SUPPLIED WITH THE KIT.

Gutter Assembly and Fitting

Decide at which end the downpipes will be located. Use a length of string to give a fall of 1/2"/12mm over every 10' / 3.04m.

Fix the downpipe brackets into position with 3/4"/ 19mm countersunk screws and slide the downpipe into the brackets and fix loosely with the bolt & nut. See fig 2.

Drill a 5mm fixing hole in the stop end outlet, screw it into place with the downpipe connected. Using a 3/4"/ 19mm screw. See fig 4.

Fix the support brackets fig 3 and joint bracket/s fig 5 as required for the length of greenhouse. Use 3/4" (19mm) screws. Working from the downpipe end fix the guttering into the brackets having trimmed it to length if necessary with a fine saw. The stop end should finish level with the gable end of the greenhouse.

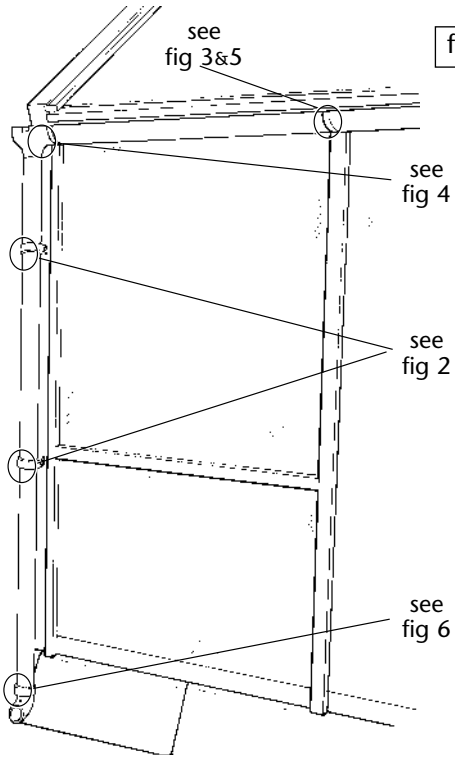

fig 1

Tighten up the downpipe and fix the shoe at the bottom. See fig 6.

Repeat the process on the other side.

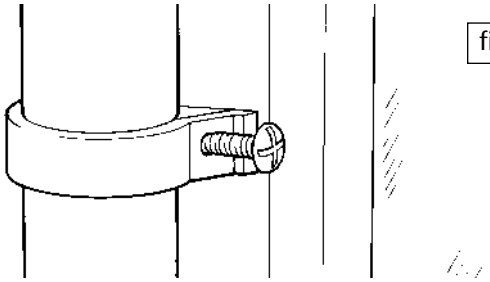
fig 2

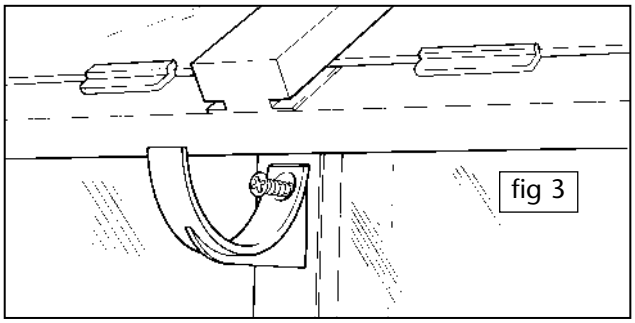
fig 3

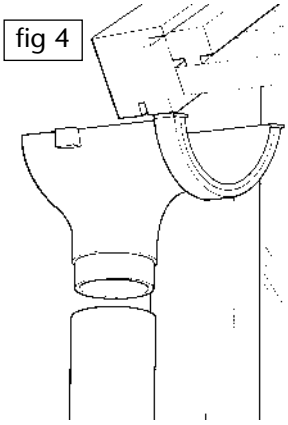
fig 4

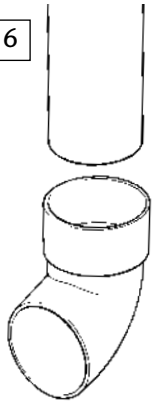
fig 6

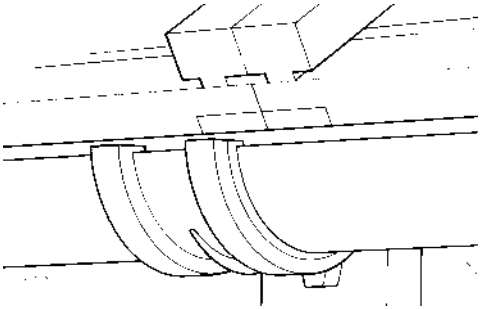
fig 5

HIGH LEVEL SHELVING

High Level Shelving

The high level shelving can be fitted on either side of the greenhouse.

There are two different brackets for supporting the shelving against the side of the greenhouse. Those in figure 2 are fitted at each end of the greenhouse or at the end of the shelving when against a partition or when the building is 4570mm (15ft) or over and has middle braces. These are fitted by measuring 345mm (13¾") down from the top of the side panel and making a small hole. This is the location of the screw hole and should be attached using a 3/4" round head screw.

fig 1

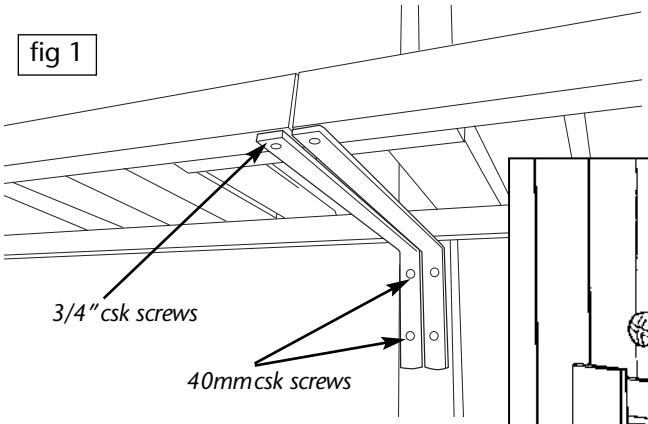

fig 2

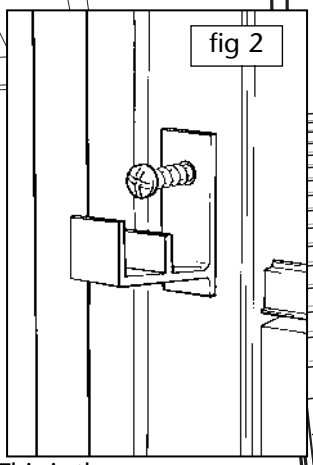

fig 3

Diagram shows a greenhouse with no middle brace, eg: shorter than 13'7" in which case metal support brackets are used to hold the shelving.

Once these are fitted a string can be pulled taut between them. The intermediate brackets can then be offered up so that the top of the brackets is just touching the string and fitted using the 40mm screws. Where two pieces of shelving join there will need to be two brackets fixed. Offer up the shelving and attach to the intermediate brackets using 3/4" screws from underneath. A wooden splicing block will need to be attached behind the front bearer of the shelving using 1¼" screws. Fig 4 refers. Finish off the installation by attaching the aluminium strap from the front of the shelving to the roof member as per figure 5 wherever you have used the bracket as per figure 2.

fig4

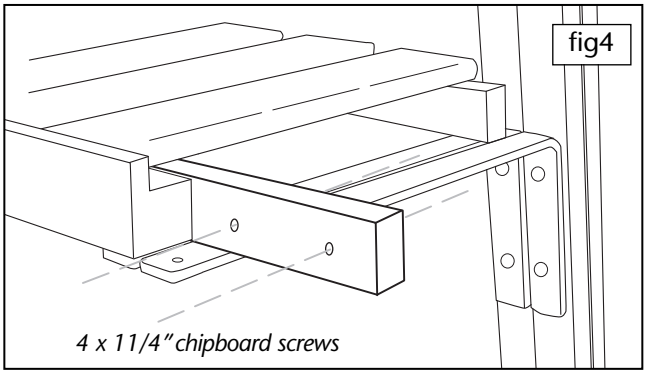

HIGH LEVEL SHELVING

High Level Shelving

You may need to attached an additional bracket to the end of this strap when fitting shelving next to a partition. See fig 6.

You will need to modify shelving when fitting shelving in a building with middle brace. Each end slat will have to be measured and cut to fit around the brace. The shelving can then be secured to the brace using two further brackets. See fig 7.

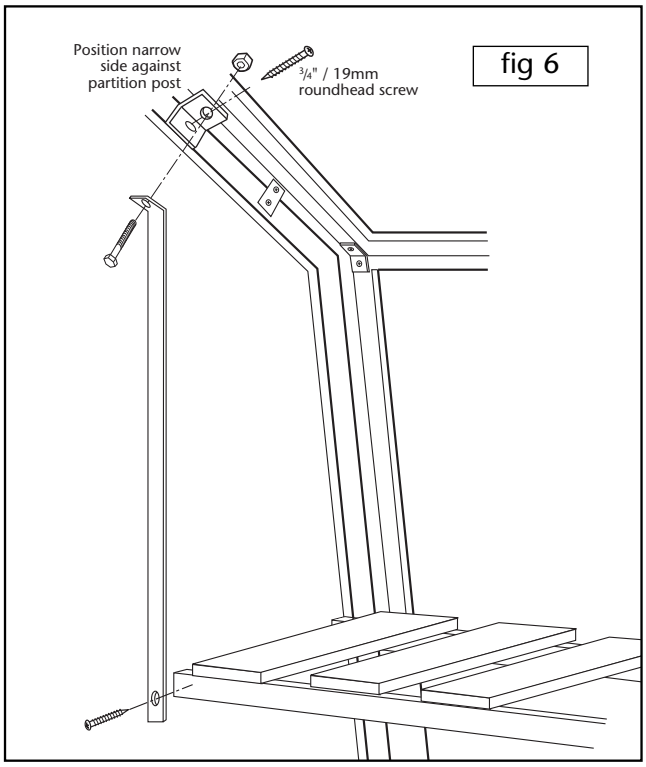

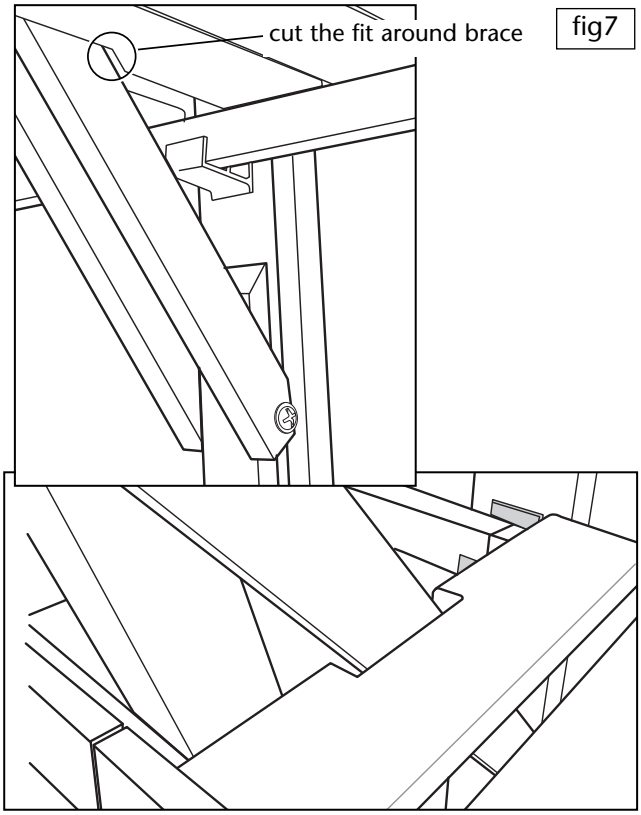

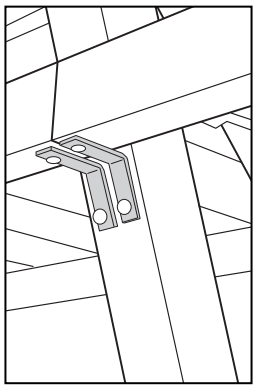

STAGING

Staging Assembly

Fitting of 520mm staging on 6ft Amateur

The staging can be fitted on either side of the greenhouse.

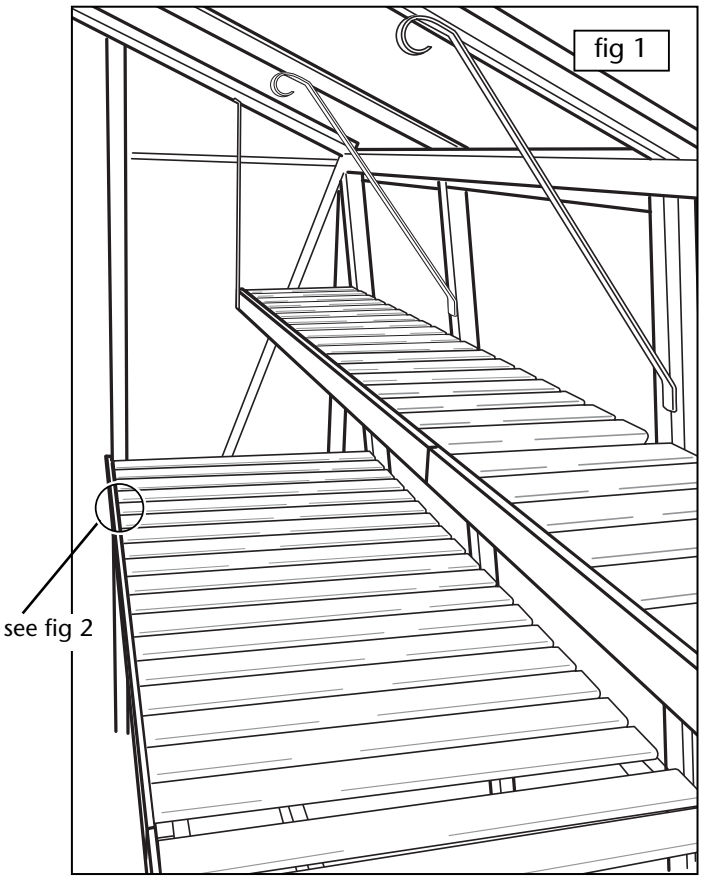

There are 2 different brackets for supporting the staging against the side of the greenhouse. Those in figure 2 are fitted at each end of the greenhouse or at the end of the staging when against a partition or when the building is 4570mm (15ft) or over and has middle braces. These are fitted by measuring 786mm up perpendicular from the bottom of the kerbs and making a small hole. This is the location of the screw hole and the bracket should be attached using a 3/4" roundhead screw.
Once these are fitted a string can be pulled taut between them. The intermediate brackets can then

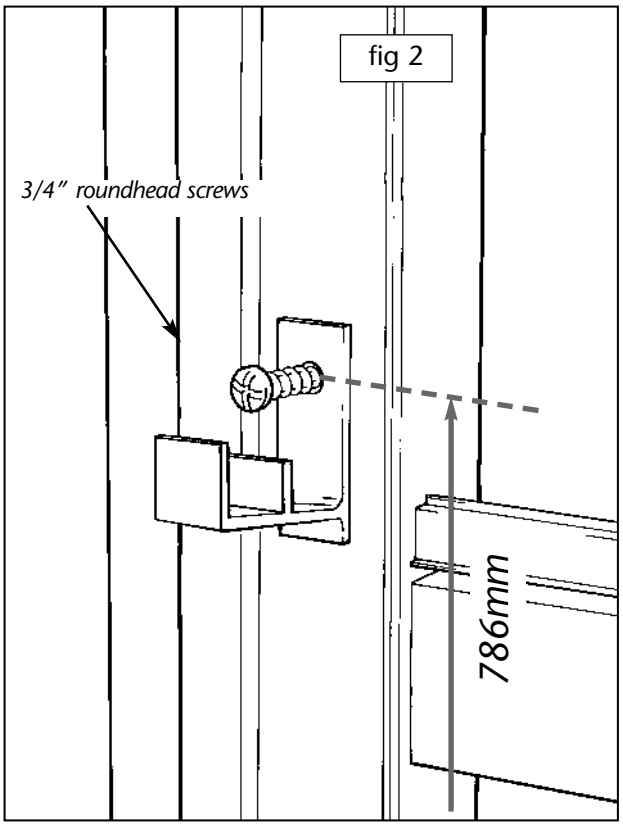

be offered up so that top of the brackets is just touching the string and fitted using the 40mm screws. Where 2 pieces of staging join there will need to be 2 brackets fixed.
Offer up the staging and attach to the intermediate brackets using 3/4 "screws from underneath. Fig 3 refers

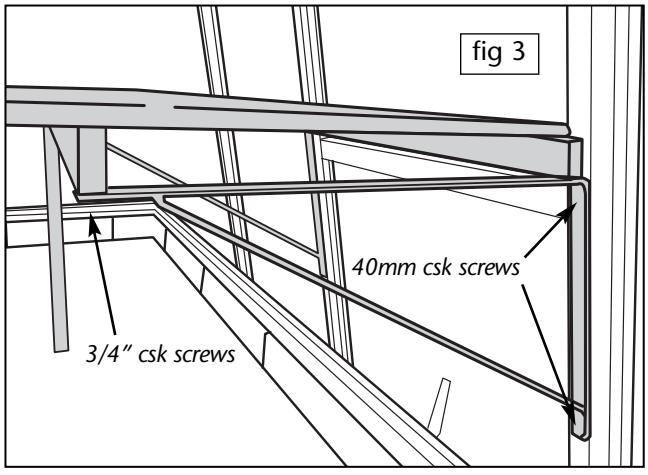

Staging Assembly

Finish off the installation by attaching a staging leg to the bearer in the middle of the staging using 1" screws wherever you have used the bracket in figure 1 except at the end where a small bracket can be attached to the vertical posts in the gables and the staging rest on these and secured using 3/4" roundhead screw. Fig 4 refers.

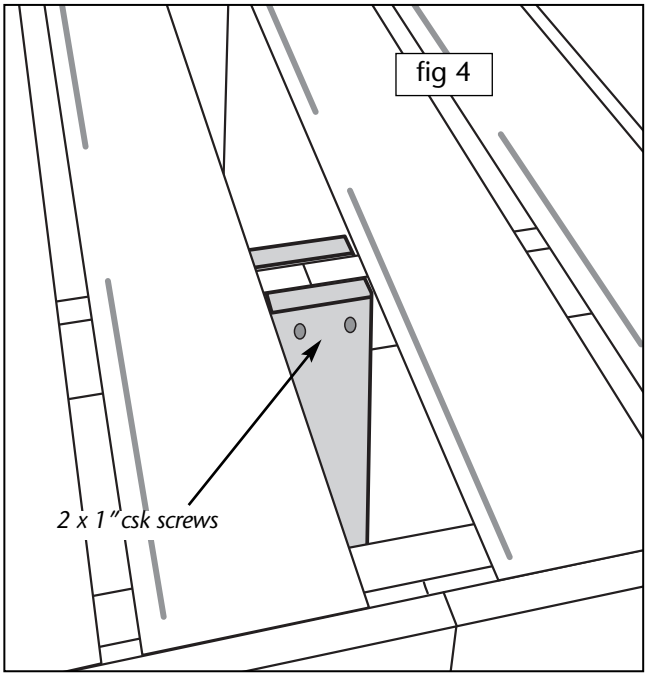

GLASS DETAILS

Glass Details

In the event that any glass is broken upon delivery we ask that you purchase the glass locally and forward us the bill for repayment. This will be the quickest way to rectify matters and get your greenhouse completed. The details give the sizes and method of fitting.

If you are not happy to do this or have any other difficulties please contact our After Sales Department on 01295 770291 during office hours. Please refer to the brown envelope attached to the delivery notes.

Replacing Glass
When handling glass please ensure you wear gloves.

Roof glass
All roof glass slides into glazing grooves and is held in place at the eaves with plastic glass stops which are fixed with screws.

Side and End glass
All glass is held in on one side by a glazing groove and on the other by a timber beading and plastic glass stops at the bottom. The timber beading can be prised off carefully with a wide putty knife and the plastic glass stops are fixed with screws.

Replacement glass should be slid into the glazing groove, and with the other side in the rebate it should be pushed upwards into the top glazing groove. The glass stops and beading should then be re-fixed.

Glass Sizes
We use 3mm horticultural glass as standard, 4mm Toughened glass as an optional extra.

Door End Gable Glass

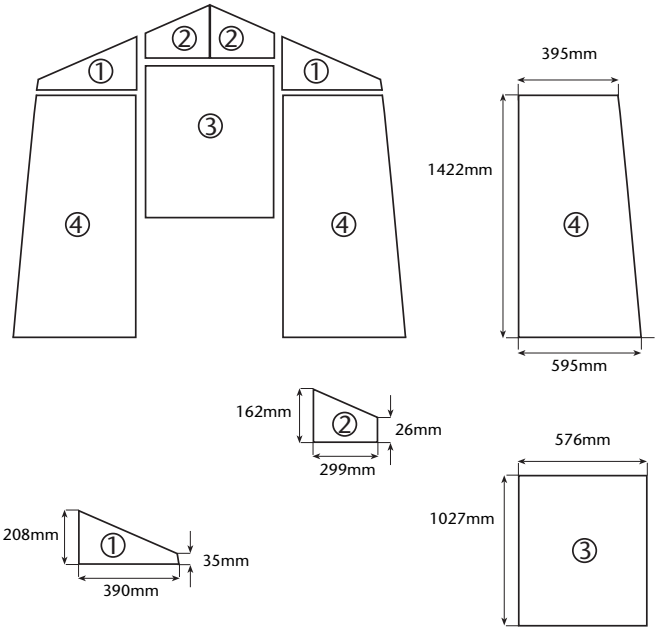

Plain End Gable Glass

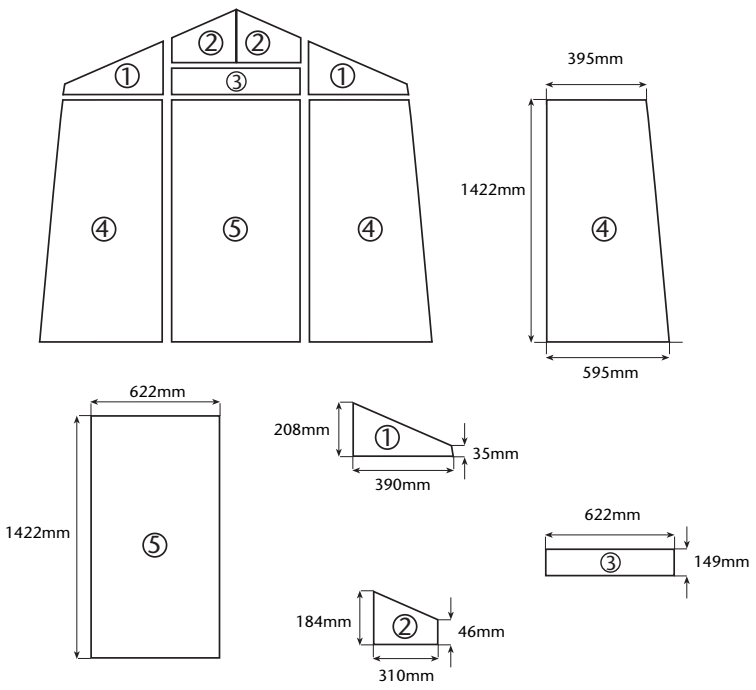

GLASS DETAILS

Roof & Side glazing

Roof Panel glass

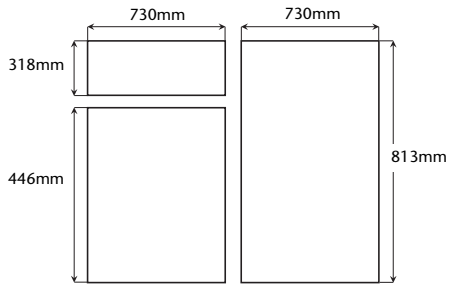

Side Panel glass

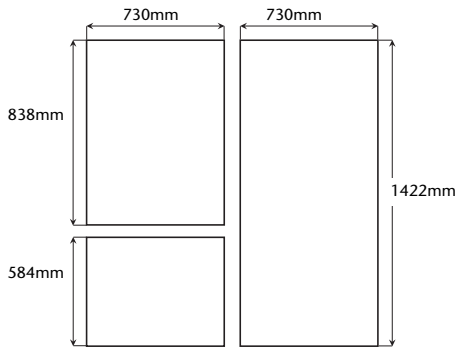

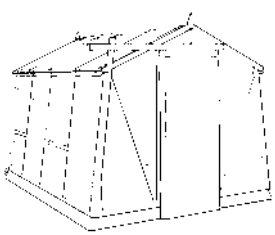

ALTON Greenhouses, Station Works, Fenny Compton, Southam, Warwickshire CV47 2XB
Telephone: 01295 770795 · Fax: 01295 770819

04/11