Robinsons
ALUMINIUM GREENHOUSES

Rosette
Assembly Instructions

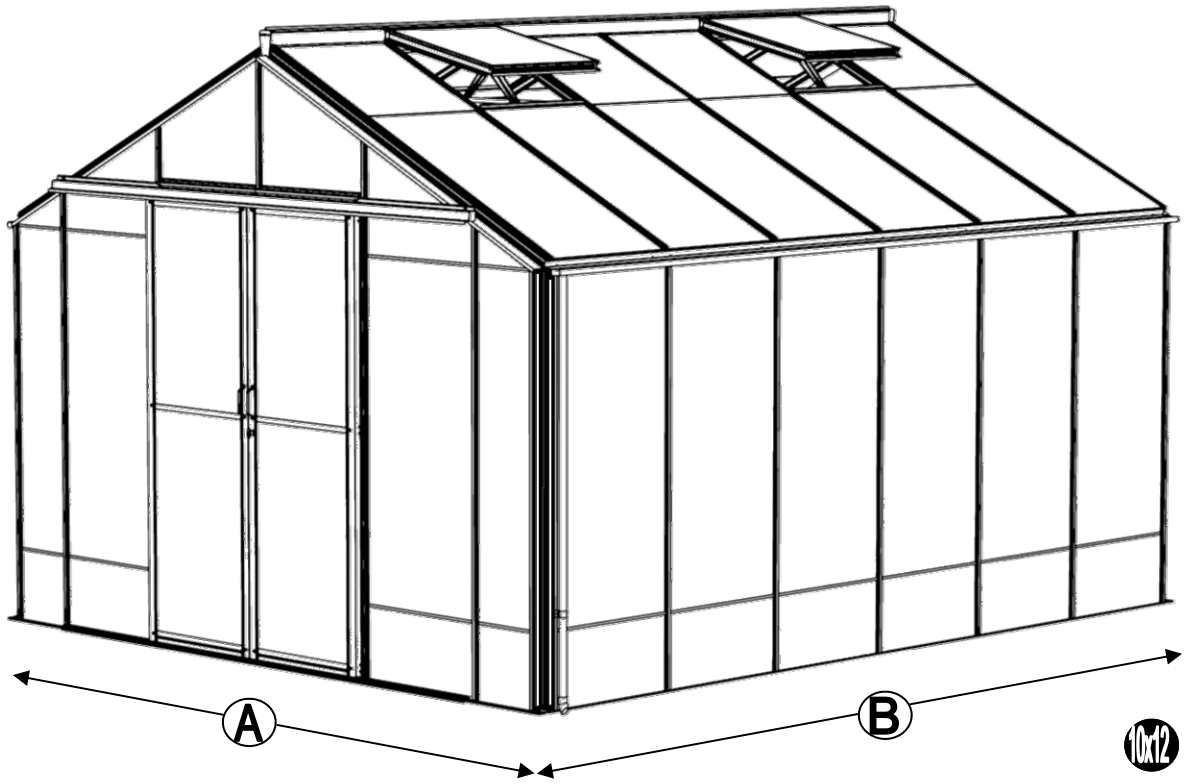

NOMINAL SIZE	A (mm)	B (mm)
10 x 6	3208	2012
10 x 8		2632
10 x 10		3252
10 x 12		3872

NOMINAL SIZE	A (mm)	B (mm)
6ft extension	-	1860
8ft extension		2480
10ft extension		3100
12ft extension		3720

Issue 3

GB

Thank you for purchasing your new Robinsons greenhouse. We recommend you familiarise yourself with the instructions and read all safety information before you commence assembly. This instruction manual is also available online at www.robinsonsgreenhouses.co.uk in our technical help section should you need to reprint it. Should you require any additional advice you can always call us on 01782 385409.

These instructions are divided into sections highlighted by a white number/letter on a black background at the bottom corner of most pages (see opposite page for details); **part lists**, **B**-base, **P**-preparation, **1**-sides, **2**-front gable, **3**-rear, **4**-joining the four sides together, **5**-roof, **6**-vent, **7**-door, **8**-glazing, **9**-vent attachment, **10**-door attachment, **11** anchoring down, **12** optional louvre, **13** optional shelf, **14** optional staging, **15** finishing touches. If you need to contact us for assistance please refer to the relevant section/s. If your building is longer than 12', i.e. has an extension then please also refer the separate extension manual.

Safety Warning

- Glass and aluminium can potentially cause injury. Please ensure you wear protective goggles, gloves, headgear and suitable footwear when assembling and glazing the building.
- Please remember that glass is fragile and should be handled with extreme care. Always clear up and dispose of any breakages immediately.
- Do not assemble the greenhouse in high winds.
- For safety reasons and ease of assembly, we recommend that this greenhouse is assembled by a minimum of two people.
- Please clear all lying snow from the greenhouse roof as it can cause the roof to buckle or collapse.

Site Preparation

- When selecting a site for your greenhouse, it is vital that you choose as flat and level an area as possible.
- A concrete or slabbed base will provide the most solid foundation for your greenhouse.
- IMPORTANT: Do **not** fix your building down until the building is fully assembled, including glazing.
- Avoid placing your greenhouse under trees or in other vulnerable locations.
- To minimise the risk of wind damage, try to select as sheltered a site as possible, e.g. beside a hedgerow or garden fence.

Additional Considerations

- Please bear in mind that assembling your greenhouse can be time consuming. You may need to spread the construction over two or more days. We recommend that you avoid leaving the building partially glazed. If you ever have to leave your greenhouse half assembled and not anchored down, weigh it down with slabs or bags of sand to stop the wind moving it.
- You will find it helpful to prepare a large, clean and clear area in which to work in. A garage floor or flat lawn area is ideal.
- If you have arranged for someone to install your greenhouse for you, please check that all components are included. The components can be identified by their distinctive profiles, lengths and quantities detailed in the parts list (see next page).
- Anchoring down your greenhouse should be the final stage of construction (including glazing).
- Once installed your greenhouse requires little maintenance, but to maintain the smooth running of your door(s) WD40 or similar can be applied to the door wheels and lower door guides.

Guarantee

- Your new Robinsons greenhouse is guaranteed for 10 years against faulty manufacture of the framework. This does not include glazing, moving parts, accidental damage or wind damage.

KEY SYMBOL	KEY DESCRIPTION
	EXTERNAL VIEW
	INTERNAL VIEW
	THINK
	THIS SECTION RELATES TO ANOTHER (e.g. 1 to 5)
	CORRECT
	DO NOT FIX DOWN!
	TWIST TO LOCK
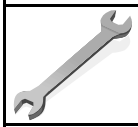	**TIGHTEN**
	PUSH AND HOLD
	CUT TO LENGTH

UPDATE: Robinsons plastic / aluminium cover strips -

On a Robinsons building the glazing capping is in two parts. The lower plastic capping screws into the glazing bars pressing the glass down onto its rubber beading. The upper plastic / aluminium covers then need to be applied to cover the heads of the self-tapping screws. If you are struggling to press on the cover strips then we recommend the use of a rubber mallet or perhaps a wooden block and hammer, a short sharp tap onto the cover at one end is all that is needed to stretch the cover around the lower capping protrusions locking it into place. You can then either continue to use the mallet along the length of the cover or continue just using the palm of your hand. Once in the building and the edges are protected Robinsons 4mm thick toughened safety glass is very strong and can cope with the vibrations caused by hitting the covers though we would not recommend that you hit the glass directly. Some of the aluminium cover caps have a hole in them at one end which is sometimes used to hang the parts for powder coating. You can if you wish use the hole to stop the covers from sliding in the roof using a glazing screw, note you will have to use a countersunk screw under the vents to avoid interference with the vent bottom.

SECTION No	TITLE	ASSEMBLY SYNOPSIS: IMPORTANT INFORMATION / CONSIDERATIONS
	PARTS LIST	Identify and separate all like for like components prior to assembly. The 'parts list' also separates parts into the various sections 1 - 12 shown below. Parts can also be identified by their profile pictures and stated lengths etc..
B	BASE	Base dimensions and recommendations. Ensure that your base is level as this will make assembly of the building, especially the glazing of the roof much more straight forward.
P	PREPARATION	Tools required. IMPORTANT: Use WD40 or similar in the glazing bar channels and insert the black glazing rubber prior to frame assembly.
1	SIDES	Take the side glazing bars 'D066' with the rubber inserted and the diagonal braces 'D103', use 10mm bolts to join them to the gutter and 15mm bolts to the cills (note how the head of the bolt slides into each glazing bar during construction).
2	FRONT	Again ensuring that the gable framework is rubbered-up follow the diagrams to assemble each end of the building. Make sure that you have inserted the extra bolts utilised in sections 4, 5 and 10. On the roof and side corner bars not every rubber channel will require rubber unless it is to be utilised in a partition (see separate manual and section P).
3	REAR	
4	JOINING THE FOUR SIDES	Take the two sides (1) and both gables (2 & 3) and join them together on your base. It is a good idea to tie some ladders to the sides to support them if you do not have anyone to hold them for you.
5	ROOF	Attach the ridge and then the rubbered-up roof bars ensuring that they are fully butted up to the ridge and down onto the gutter. If you have cresting then it is a good idea to fit it before glazing, see section (15). Some tubular braces are supplied to add extra strength, they can be fitted now or later with crop head bolts.
6a	VENT	Once the vent is glazed add silicone to the vent sides and top. Stand the vent/s on their hinge (vent top) and then leave the silicone to set.
6b	VENT SLAM	The slam bar 'D079' can be moved up and down between the roof glazing bars so that it can be butted down onto the pane of glass beneath, the autovent will be attached to it later on (9).
7	DOOR/S	Construct the door using the diagrams and then leave to one side ready for attachment in section (10).
8	GLAZING	Layout the bar cappings and covers around the building like a sundial checking that all is present and correct. You can also place the roof cappings in the gutters so they are closer to hand. The glass in the sides has to bevel on the black separator strip which is on top of the 305mm high glass base panels. This bevelling action allows the glass to tuck underneath the gutter canopy. Use the capping and the self tapping screws to then hold the glass in place. The covers then enclose the screw heads giving a neat finish. A top tip is to not attach the door post capping (D814/D836) until you have fitted the door runner and threshold (10) to give you more room to manoeuvre. It is a good idea to glaze two roof sections first to ensure the building is square followed by two side sections to ensure the building isn't leaning,
9	VENT ATTACHMENT	Take the assembled vent and slide the vent hinge 'D866' into the end of the ridge allowing the vent the pivot open and closed. Vent stops go either side of the vent to stop any lateral movement (so insert stop / vent / stop). Attachment of the Bayliss XL autovents.
10	DOOR ATTACHMENT	Use the bolts inserted in section (2) to attach the upper door track. The lower door runner 'D861' and ramp threshold 'D088' push down and lock together.
11	ANCHORING DOWN	Now that the greenhouse is finished and the door and vent/s are operating without interference then you need to anchor the building down using 2" rawl plugs and screws. Use a 7mm masonry bit in a hammer drill to create the holes.
12	OPTIONAL LOUVRE	They attach to the building during the glazing process (8) like a piece of glass with a black separator above and below them.
13	OPTIONAL SHELVING	Robinsons integral cantilever staging and shelving attaches to the inside of the greenhouse frame using either square head bolts (insert four into each side glazing bar 'D066' during construction of the sides (1)) or rectangular 'crop head' bolts which can be fitted retrospectively (both sets of bolts accompany the shelving/staging). This system allows the height of either the staging or the shelf to be set at an operator specific height. Commonly the staging brackets are set 900mm from the cills though you can alter this to suit the end user/s. The aluminium shelf / staging slats come in two lengths; (4'):1240mm 'D2002' and (6'):1860mm 'D2003'. These slats can combine to create any length of staging required, i.e. 4'+6' = 10' etc...
14	OPTIONAL STAGING	
15	FINISHING TOUCHES	Now that the main body of the structure is complete you can add; ridge caps, downpipe fittings, eave bungs. Images showing cresting and finial attachment, this is often easiest to do after section (5) rather than using the vent apertures later on (i.e. before glazing).

Rosette

Section Ref	Part No.	Section	Size (mm)	10 6	10 8	10 10	10 12
1	D043		1894	2			
	D021		2514		2		
	D022		3134			2	
	D023		3754				2
	D042		1897	2			
	D014		2517		2		
	D015		3137			2	
	D016		3757				2
	D103		1787	4			
	D066	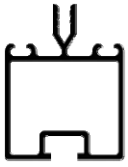	1676	4	6	8	10
	RUBBER		1000 (1m)	14	21	27	34
	D174		N/A	4	4	8	8

Section Ref	Part No.	Section	Size (mm)	10 6	10 8	10 10	10 12
2 +	D111		N/A	2			
	RUBBER		1000 (1m)	59			
3	D174		N/A	8			

Section Ref	Part No.	Section	Size (mm)	10 6	10 8	10 10	10 12
5	D044		1897	1			
	D001		2517		1		
	D002		3137			1	
	D003		3757				1
	D065	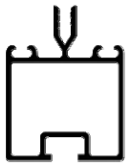	1744	4	6	8	10
	D126		445	0	2	4	6
	D128		1015	0	1	2	2
	RUBBER		1000 (1m)	14	21	28	35

Section Ref	Part No.	Section	Size (mm)	10 6	10 8	10 10	10 12
2 + 3	D038/A		3226	2			
	D048	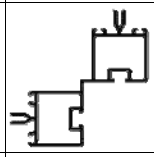	1676	4			
	D055	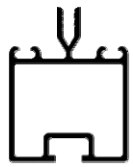	2422	1			
	D056	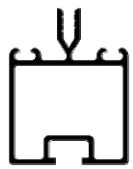	2126	4			
	D057	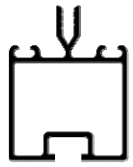	1830	4			
	D109		3140	1			
	D105		1918	4			
	D854L	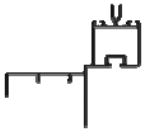	1744	2			
	D854R		1744	2			

Section Ref	Part No.	Section	Size (mm)	10 6	10 8	10 10	10 12
6	D866	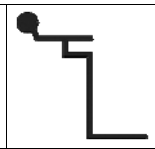	639	1	2	3	4
	D863L		613	1	2	3	4
	D863R		613	1	2	3	4
	D862	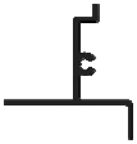	593	1	2	3	4
	D079 PLUS FLUFF		590	1	2	3	4
	D114		N/A	2	4	6	8
	D220 PLUS FS6060 SCREW		N/A	2	4	6	8
	D205	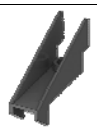	N/A	2	4	6	8

Section Ref	Part No.	Section	Size (mm)	10 6	10 8	10 10	10 12
7	D090 + D347 lock = D301	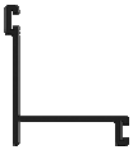	1824	1			
	D092 + D156 strike = D303		1824	1			
	D093	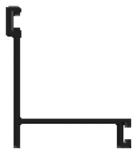	1824	1			
	D094	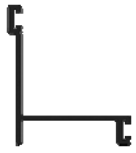	1824	1			
	D096 + D217 wheel = D307		611	2			
	D095		611	2			
	D097	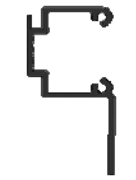	611	2			
	D232		905	4			
	D233		797	4			
	P053		N/A	2			
	D225	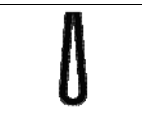	610	2			
	D840B		4000	1			

MAIN FRAME QUANTITIES VENTS / DOORS etc SEPERATE	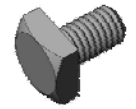	10mm	33	39	45	51
	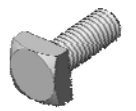	15mm	44	46	48	50
	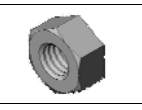	m6	77	85	93	101

Section Ref	Part No.	Section	Size (mm)	10 6	10 8	10 10	10 12
8	1 D812		1660	4	6	8	10
	2/3 D815		1830	4			
	3 D818		2126	2			
	2 D819		227	2			
	3 D822		2422	1			
	2 D823		516	1			
	5 D870		601	4	6	8	10
	5 D876		1152	4	6	8	10
	2/3 D813		1675	4			
	2 D814		1883	2			
	1 D834		1660	4			
	5 D871		601	4			
	5 D877		1152	4			
	5 D811		1754	8	10	12	14
	1 D825		1660	8	10	12	14
	2/3 D826		1677	4			
	2/3 D827		1832	4			
	3 D829		2128	2			
	3 D832		2424	1			
	2 D833		518	1			
	2 D836		1883	2			
	2 D846		229	2			
10	D054	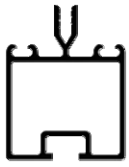	522	1			
	D865		1210	1			
	D861		2450	1			
	D088		1207	1			
	D086		2510	1			
	D085		2510	1			
	D153		~~198~~	2			
	D163	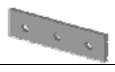	90	2			
	D150		N/A	1			
	D154		N/A	2			

Rosette

THE DIMENSIONS BELOW ARE THE EXACT EXTERNAL BASE DIMENSIONS FOR THE ROBINSONS RANGE.

We cannot emphasis how important it is to have a proper base for your Robinsons Greenhouse to be erected upon.

It is essential that the **BASE IS FLAT, LEVEL AND SQUARE AS WELL AS BEING SUBSTANTIAL** enough to take the weight of the greenhouse including its 4mm glass.

Give yourself enough room around your base to allow for fitting the glass and any on-going maintenance / cleaning. A slab base which is larger than the greenhouse is the ideal solution and is our preferred foundation.

A brick perimeter base is equally suitable providing there is a concrete foundation beneath it. We suggest using a solid brick with no frogs or holes (quality stock bricks or semi-engineering bricks).

IMPORTANT: Do not anchor your greenhouse down until it is fully assembled including glazing unless you are 100% sure your base is square and level. If not your glass will not fit properly.

IMPORTANT: If you have anything overhanging the ridge on a lean-to building then please make sure it does not interfere with the motion of the roof vents.

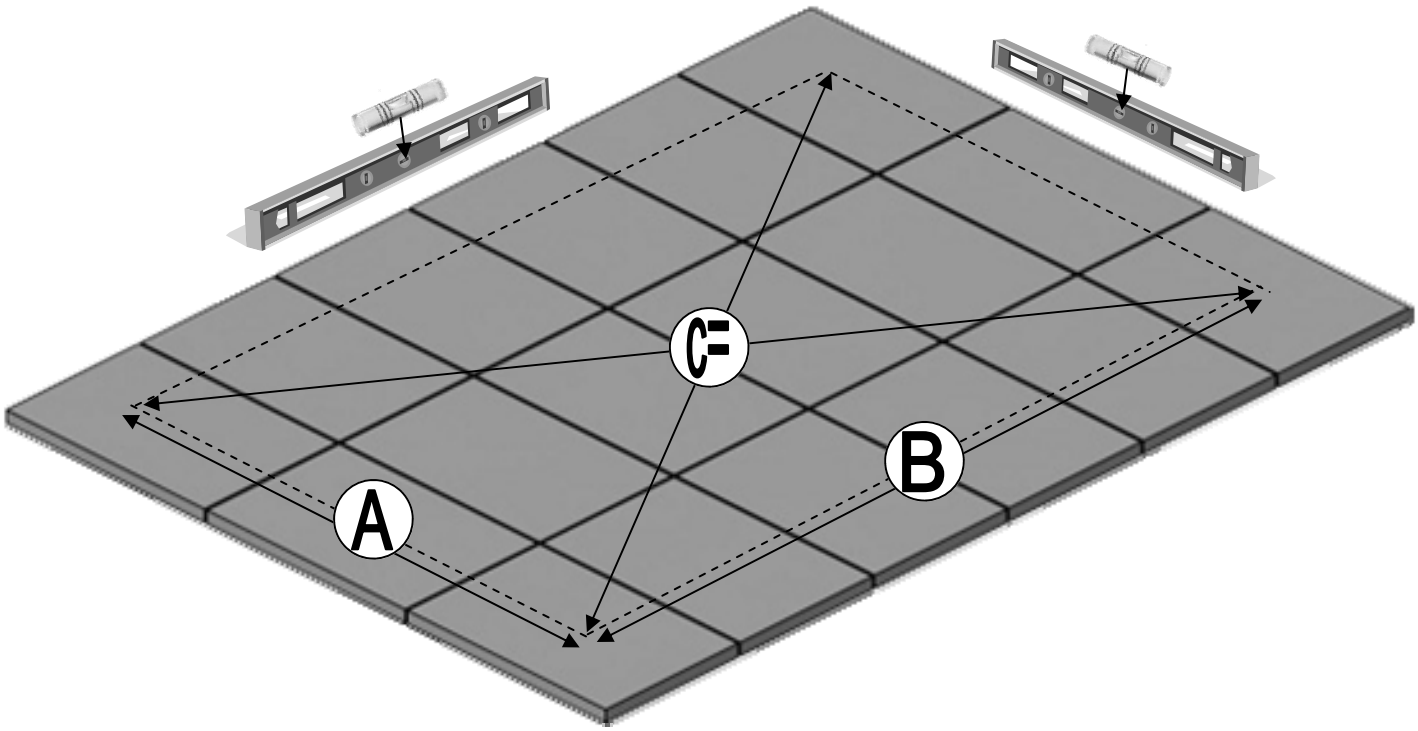

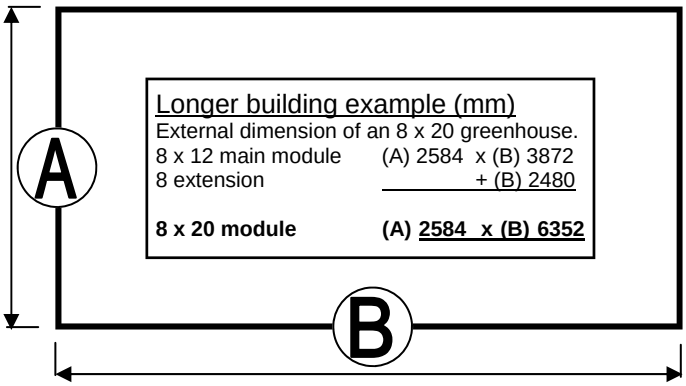

Longer building example (mm)
External dimension of an 8 x 20 greenhouse.
8 x 12 main module (A) 2584 x (B) 3872
8 extension + (B) 2480

8 x 20 module **(A) 2584 x (B) 6352**

B

EXTERNAL DIMENSIONS (mm)

Model sizes listed are **nominal**,
use 'mm' measurements.
i.e.: an 8 x 10 is the model 8'6" x 10' 8"

MODEL		A (mm) WIDTH	B (mm) LENGTH	C (mm) DIAGONAL
ROSETTE	10 x 6	3208	2012	3787
	10 x 8		2632	4150
	10 x 10		3252	4568
	10 x 12		3872	5028
EXTENSIONS	6ft ext.	-	1860	-
	8ft ext.	-	2480	-
	10ft ext.	-	3100	-
	12ft ext.	-	3720	-

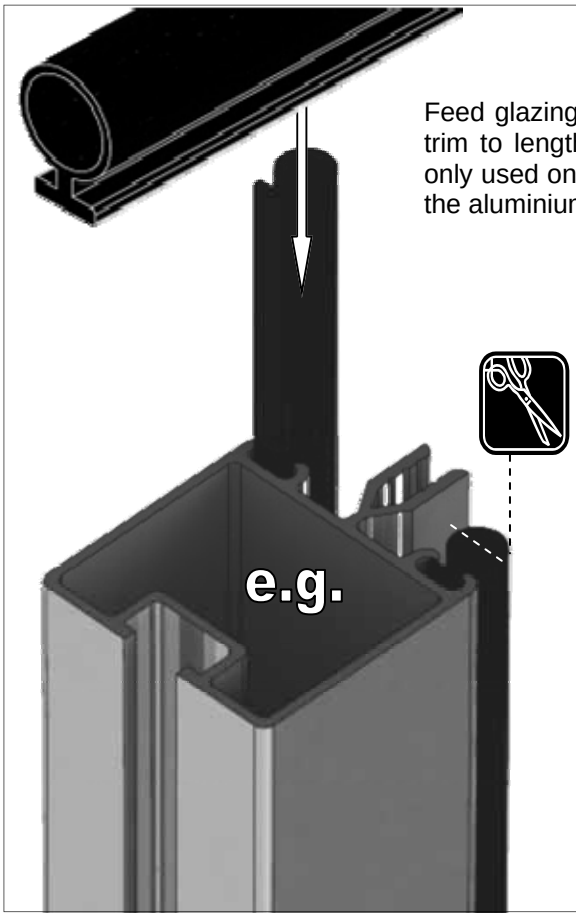

Feed glazing rubber into each glazing bar and trim to length. Notice that some channels are only used on a partition. Applying a lubricant to the aluminium channels will speed up insertion.

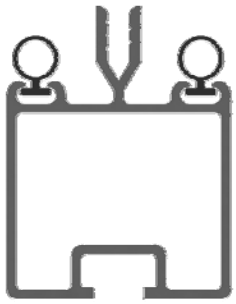

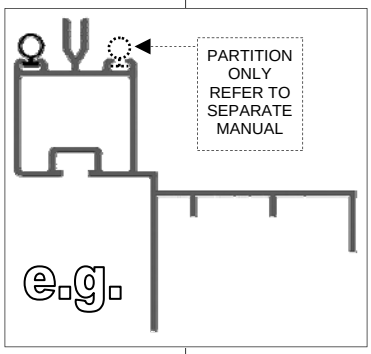

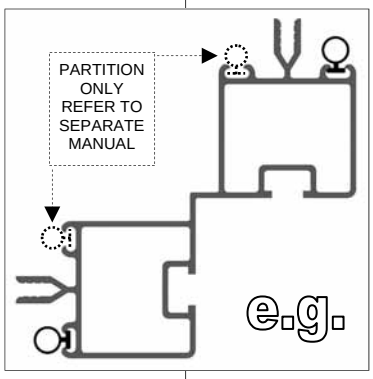

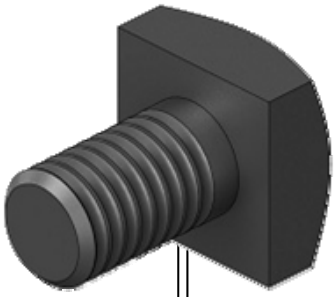

The frame is assembled by feeding square headed bolts, either 10mm or 15mm in length into the slots on glazing bars and then locating those bolts through holes in purlings and cills, etc… Twist in (rectangular) crop headed bolts are also used towards the end of construction to attach components to the frame when the glazing bar slots are no longer exposed at the ends.

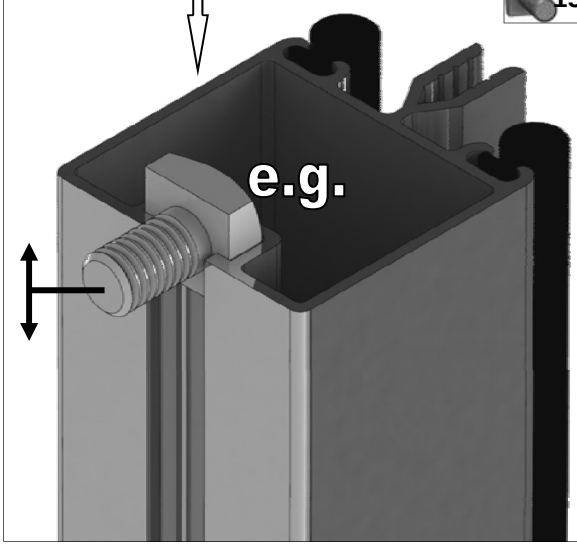

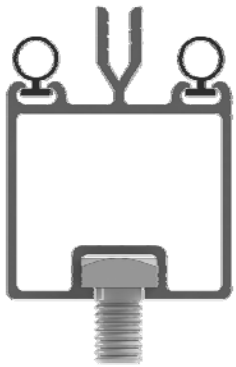

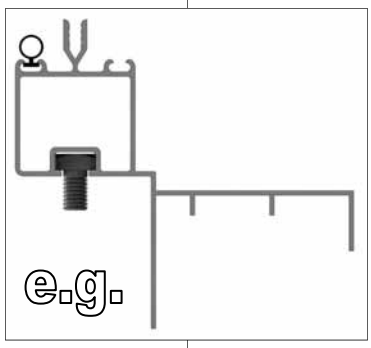

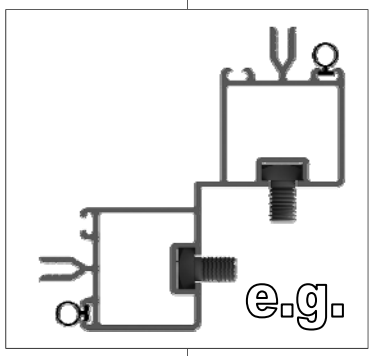

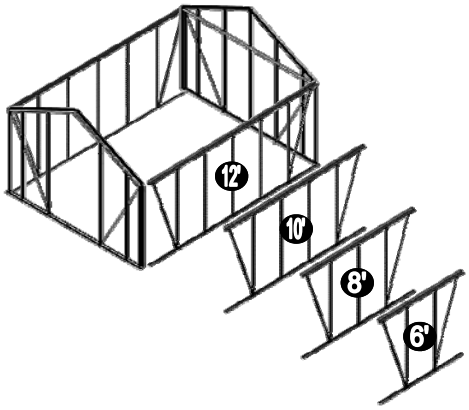

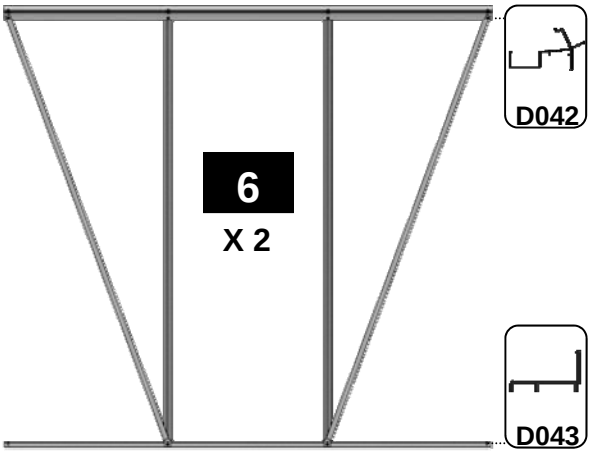

6 X 2		
Part No	mm	Quantity
D042	1897	2
D043	1894	2
D066	1676	4
D103	1787	4
D174		4
M6-10mm		4
M6-15mm		8
M6-NUT		12
Rubber	1000	14

e.g.1

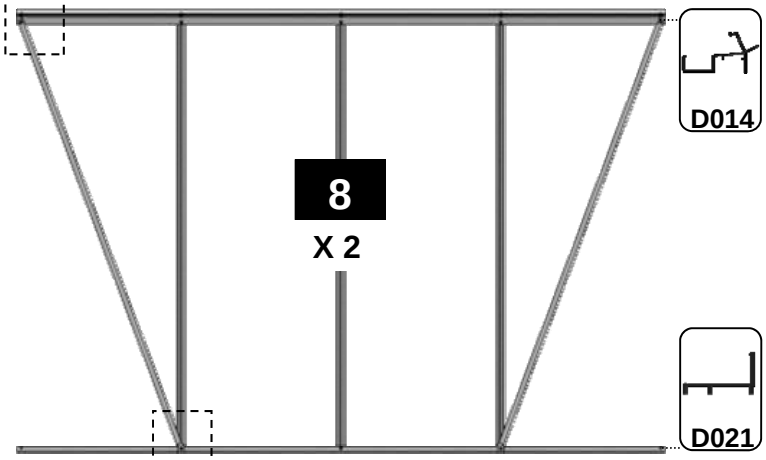

8 X 2		
Part No	mm	Quantity
D014	2517	2
D021	2514	2
D066	1676	6
D103	1787	4
D174		4
M6-10mm		6
M6-15mm		10
M6-NUT		16
Rubber	1000	21

e.g.2

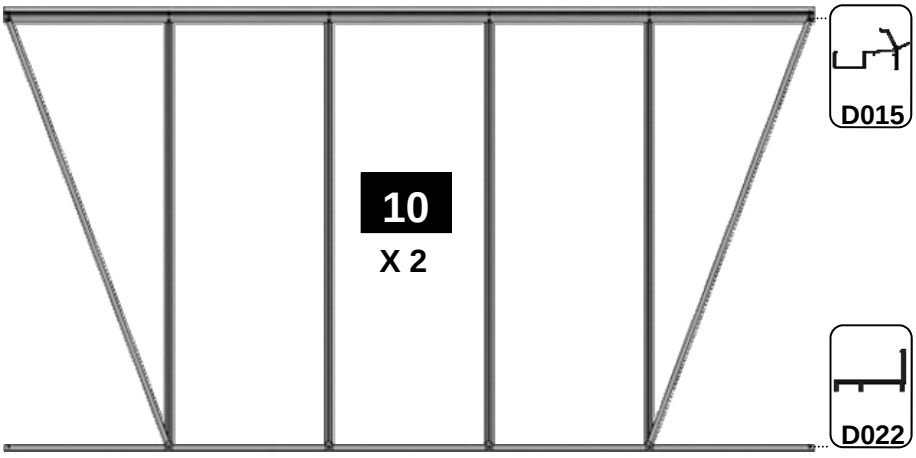

10 X 2		
Part No	mm	Quantity
D015	3137	2
D022	3134	2
D066	1676	8
D103	1787	4
D174		8
M6-10mm		8
M6-15mm		12
M6-NUT		20
Rubber	1000	27

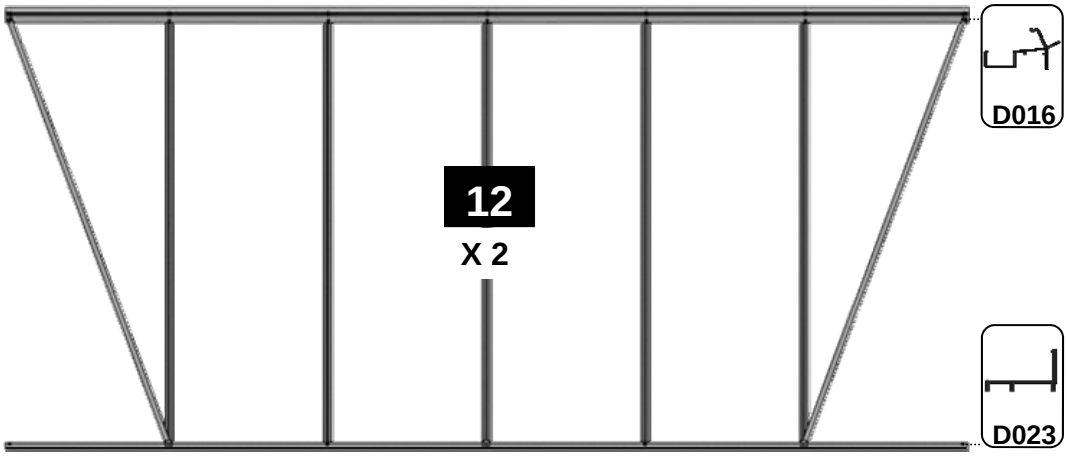

12 X 2		
Part No	mm	Quantity
D016	3757	2
D023	3754	2
D066	1676	10
D103	1787	4
D174		8
M6-10mm		10
M6-15mm		14
M6-NUT		24
Rubber	1000	34

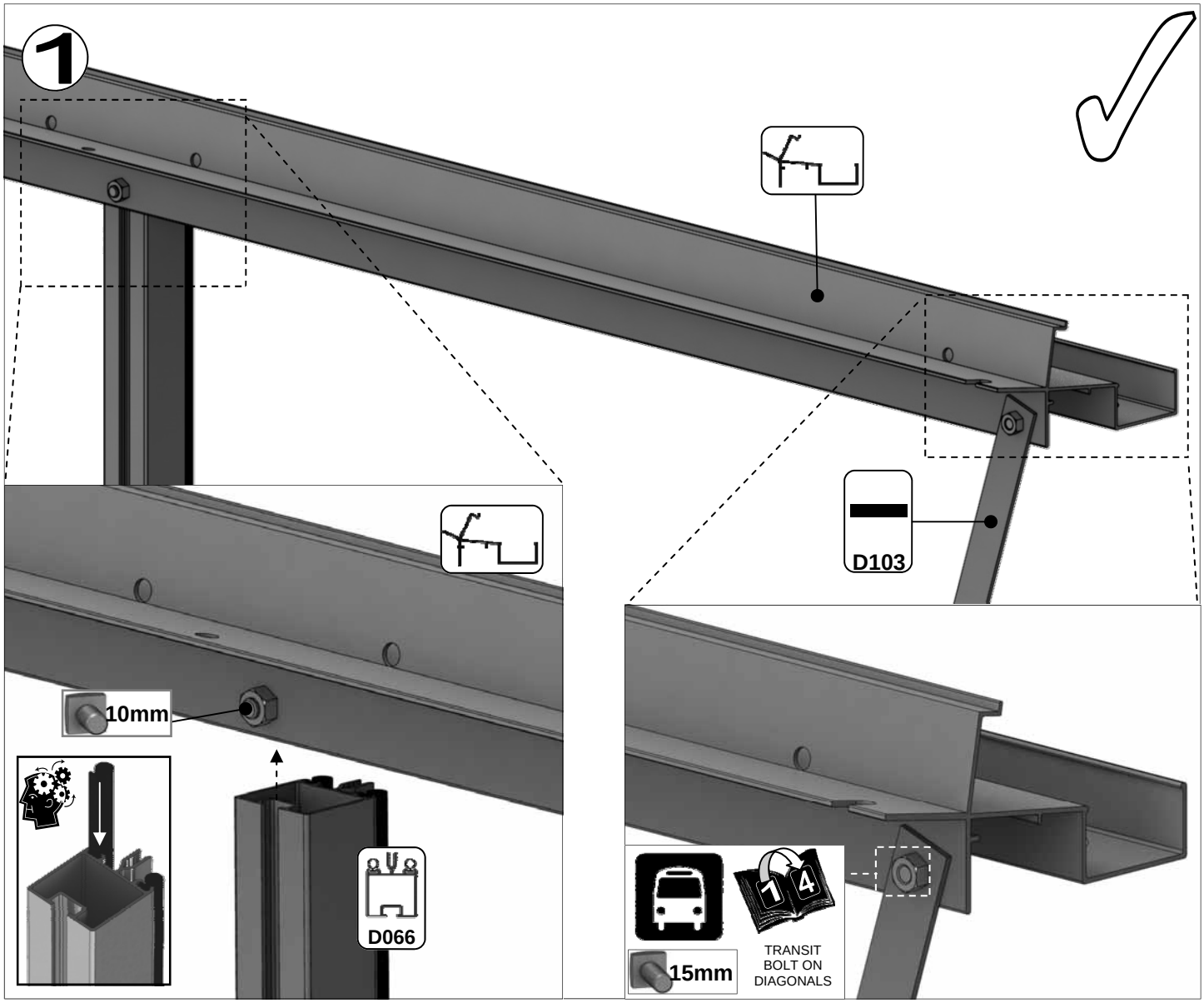
1
D103
10mm
D066
15mm
TRANSIT
BOLT ON
DIAGONALS

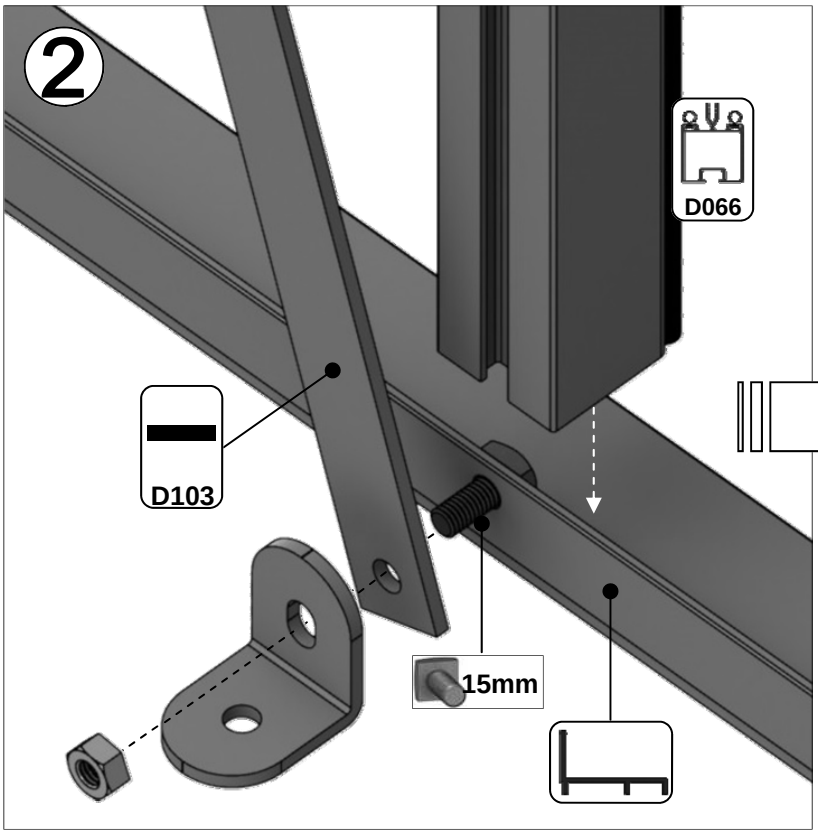
2
D066
D103
15mm

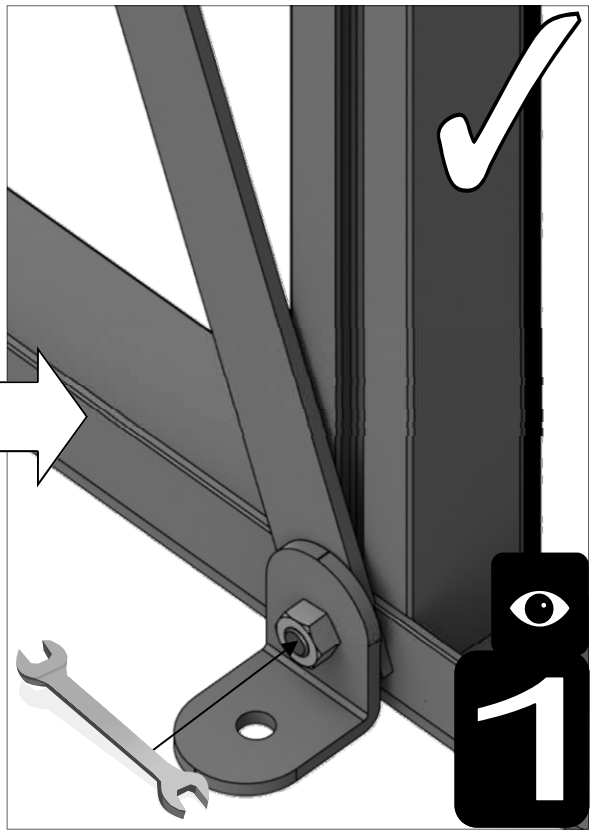
1

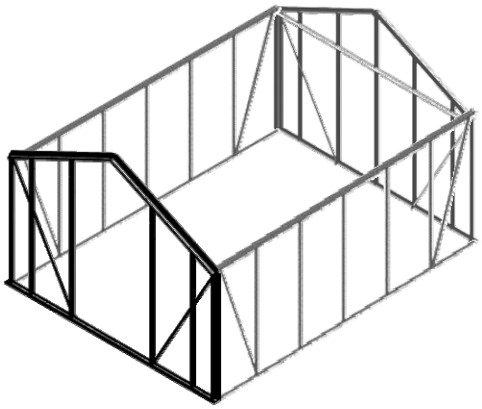

Part No	mm	Quantity
D038/A	3226	1
D048	1676	2
D056	2126	2
D057	1830	2
D105	1918	2
D854L	1744	1
D854R	1744	1

Part No	mm	Quantity
D111		1
D174		4
D227		28m
M6X10		10
M6X15		16
M6NUT		26

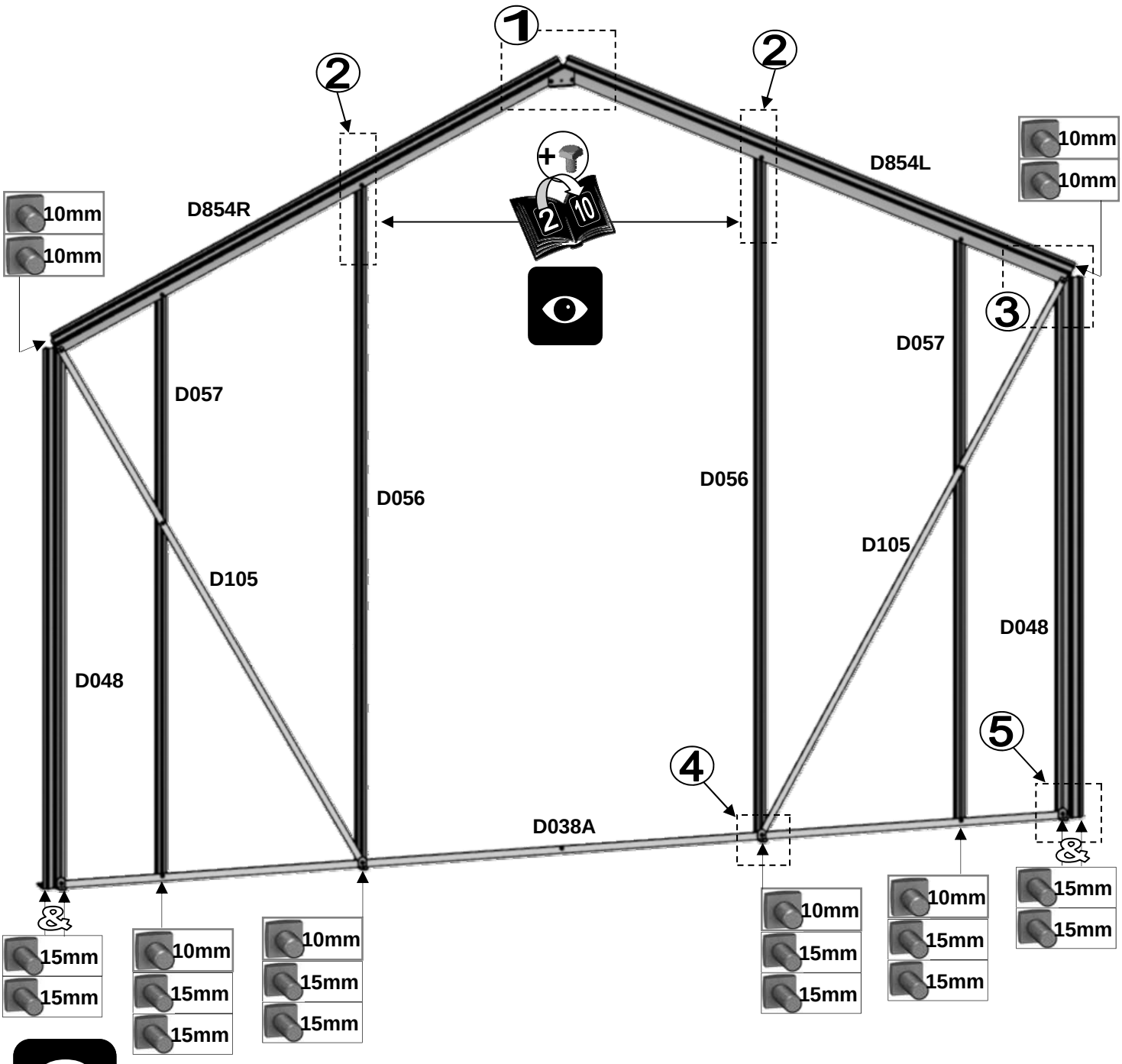

2

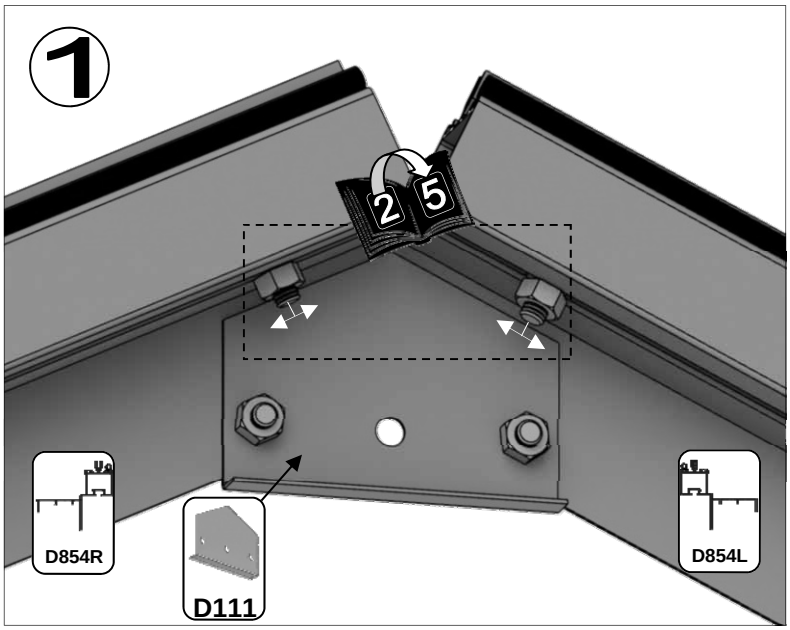
1
2
5
D854R
D111
D854L

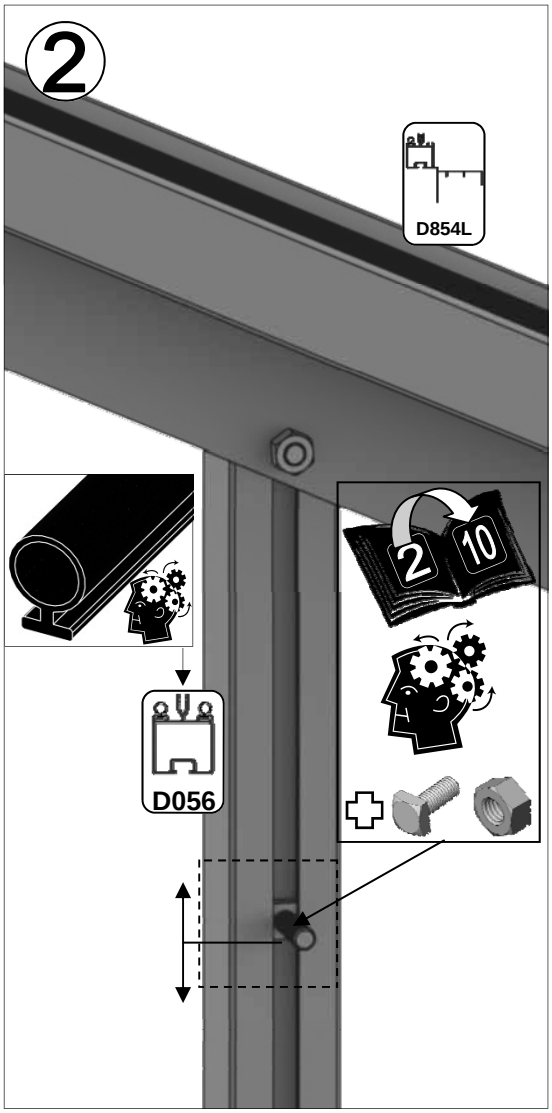
2
D854L
2
10
D056

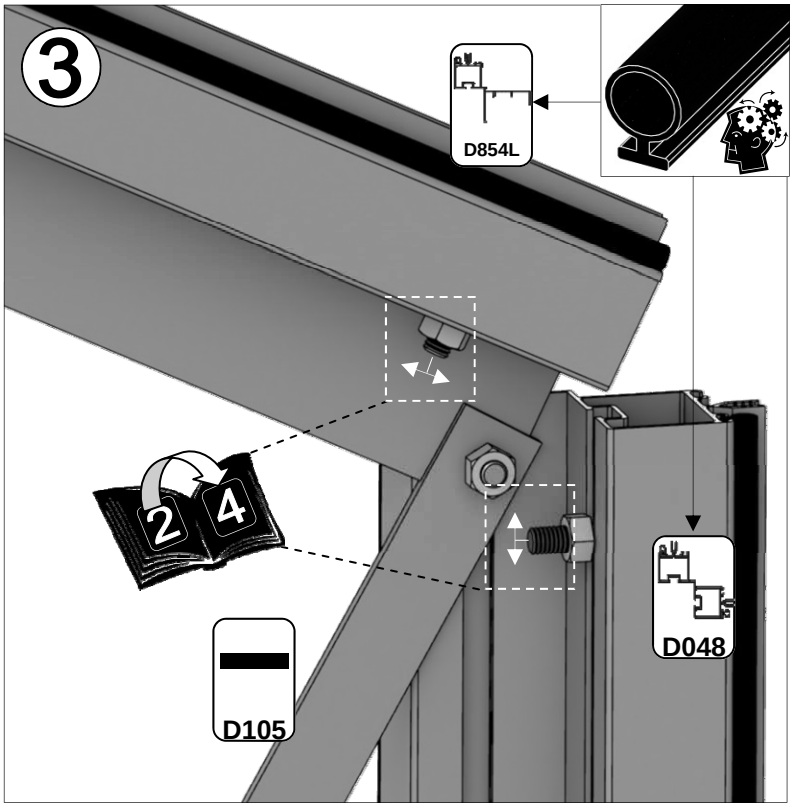
3
D854L
2
4
D048
D105

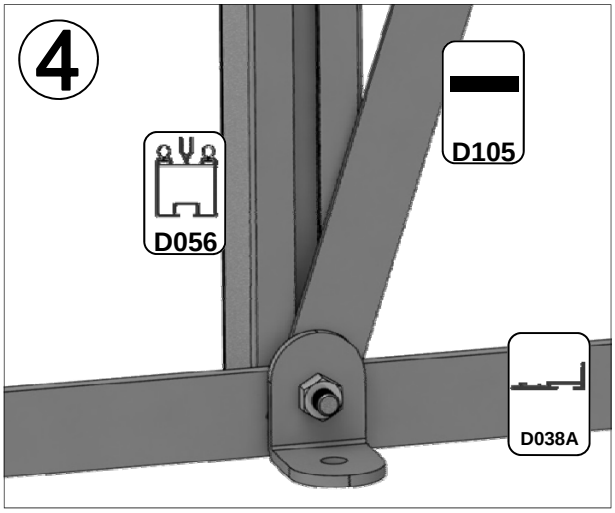
4
D105
D056
D038A

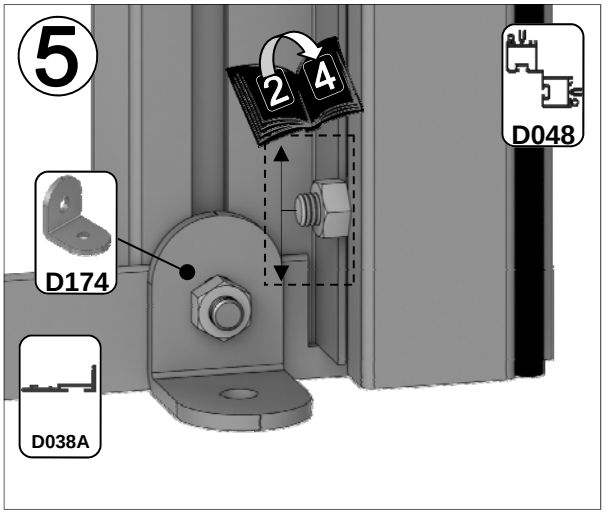
5
2
4
D048
D174
D038A

2

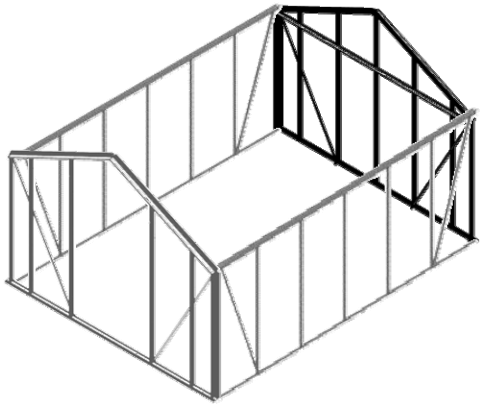

Part No	mm	Quantity
D038/A	3226	1
D048	1676	2
D055	2422	1
D056	2126	2
D057	1830	2
D105	1918	2
D109	3140	1
D854L	1744	1
D854R	1744	1

Part No	mm	Quantity
D111		1
D174		4
D227		31m
M6X10		11
M6X15		20
M6NUT		31

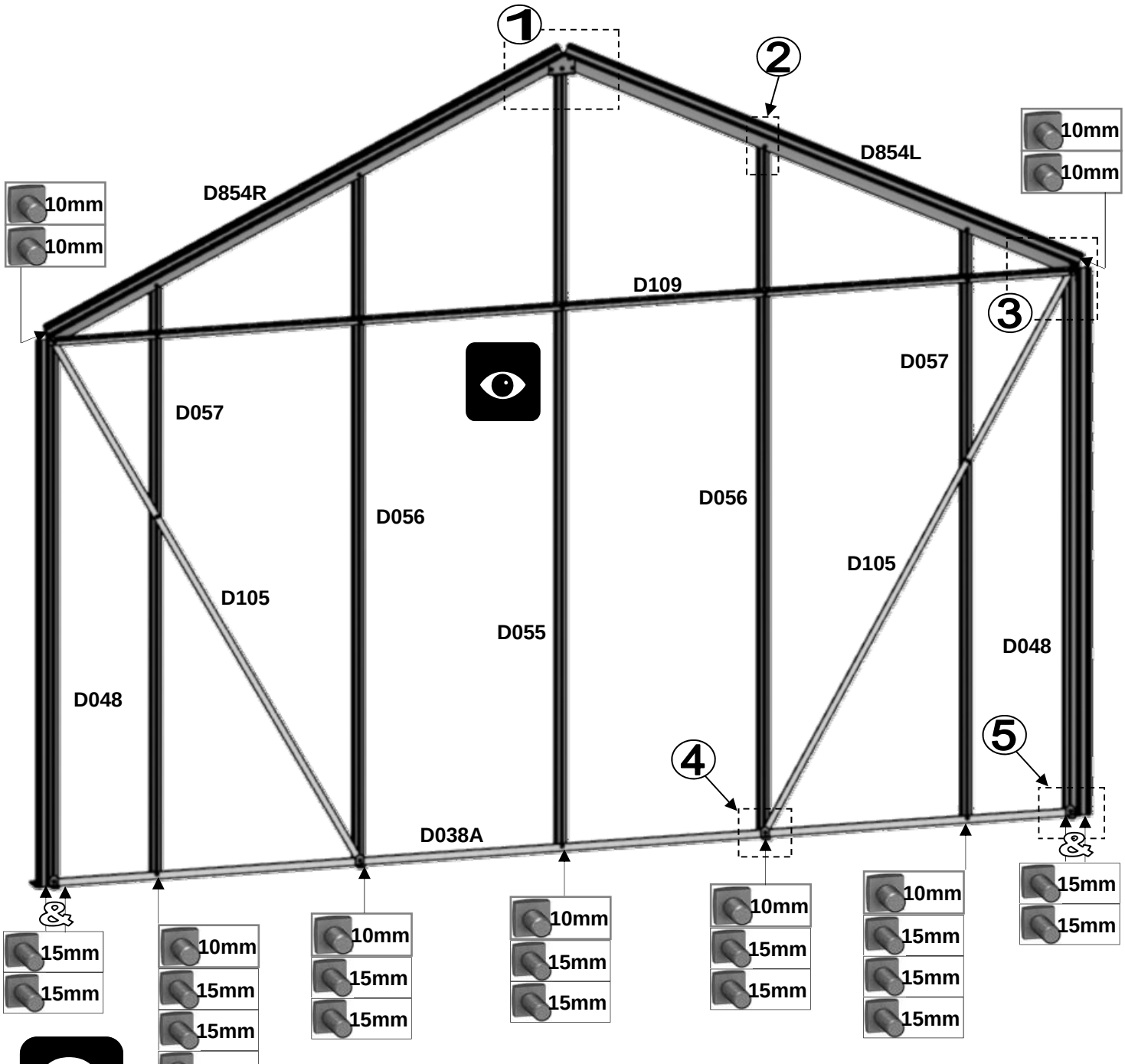

3

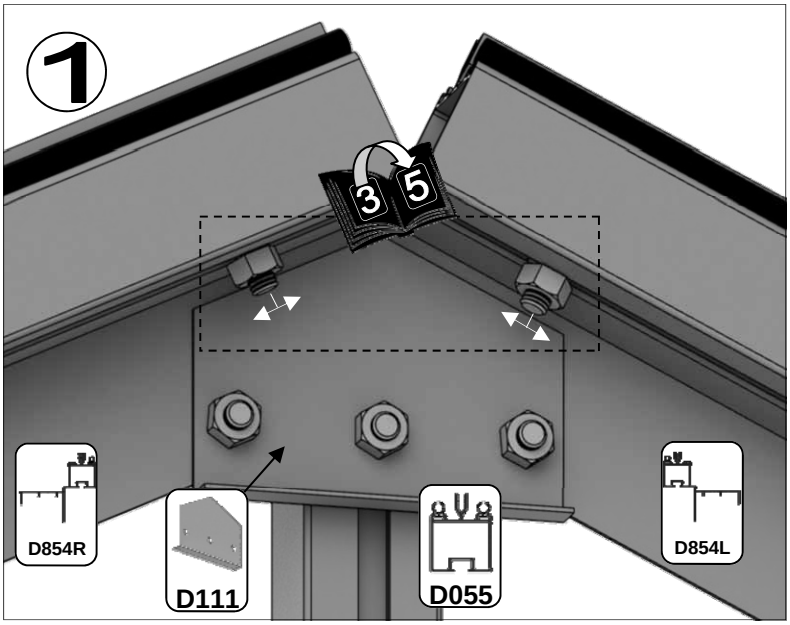
1
3
5
D854R
D111
D055
D854L

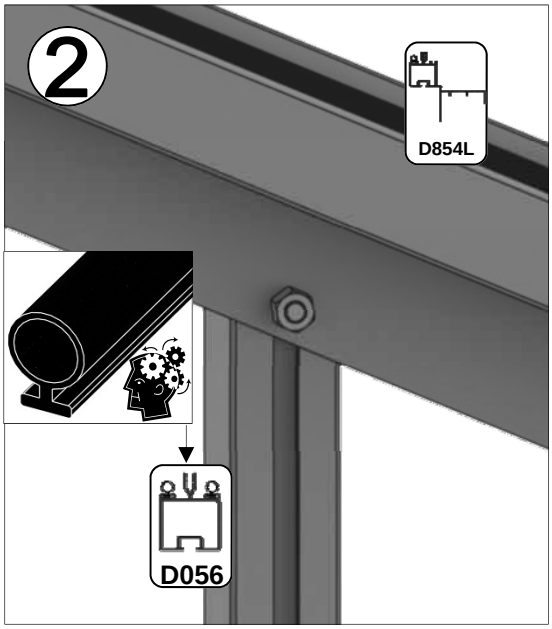
2
D854L
D056

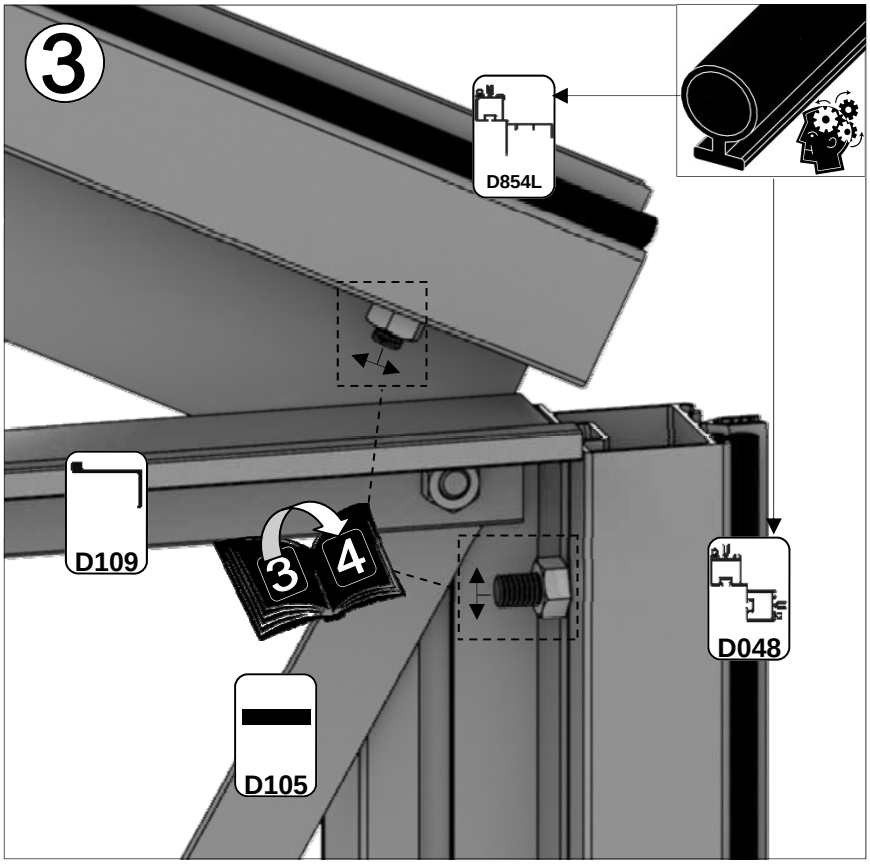
3
D854L
D109
3
4
D048
D105

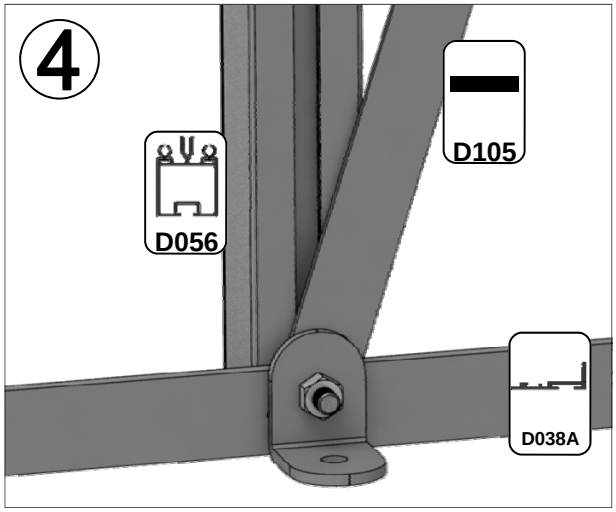
4
D105
D056
D038A

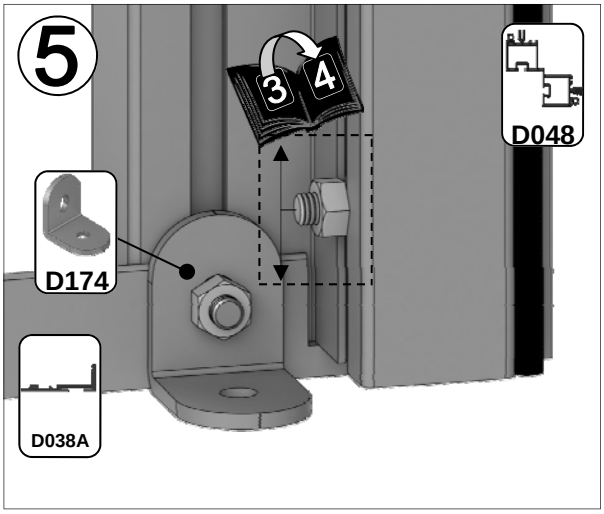
5
3
4
D048
D174
D038A

3

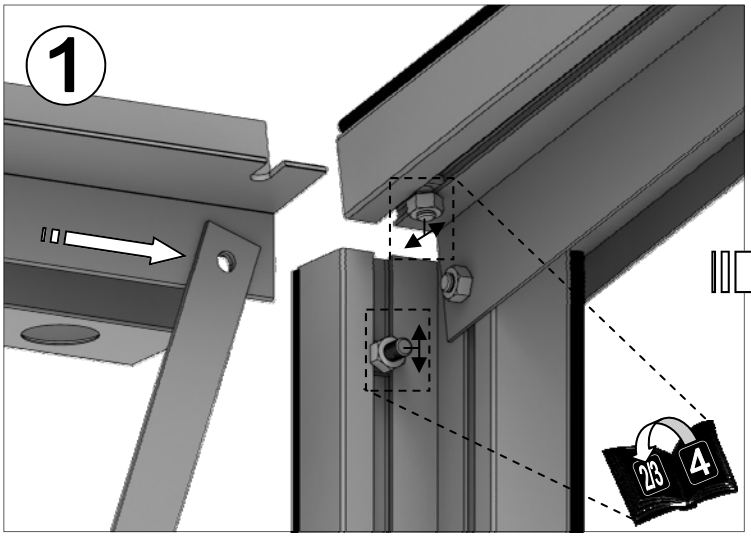
1
2
3
4

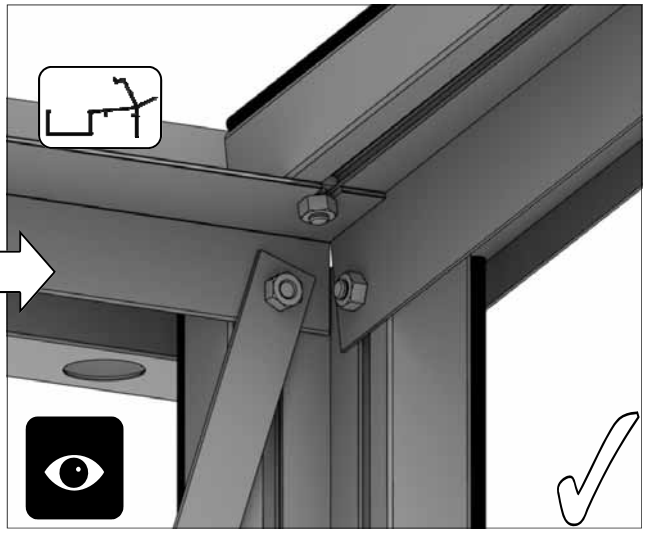

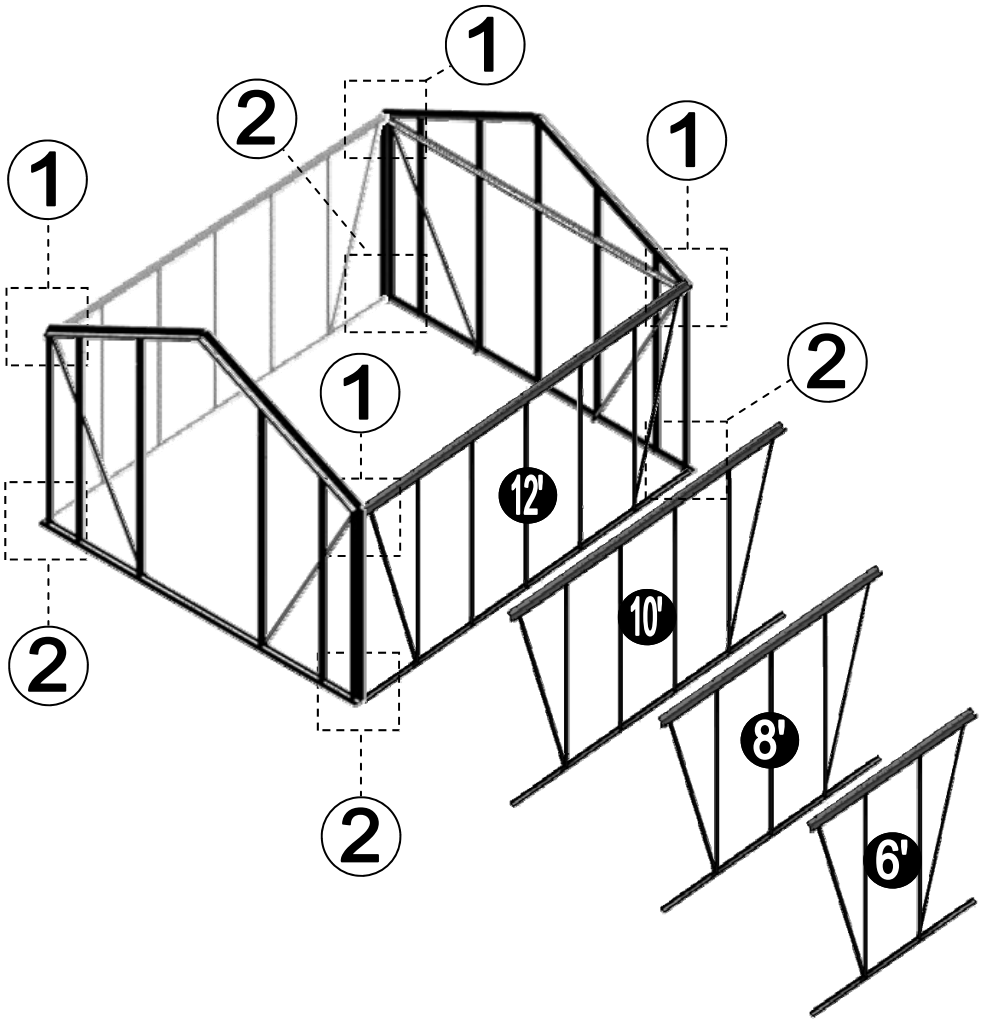
1
2
1
1
2
12'
10'
8'
6'
1
2
2

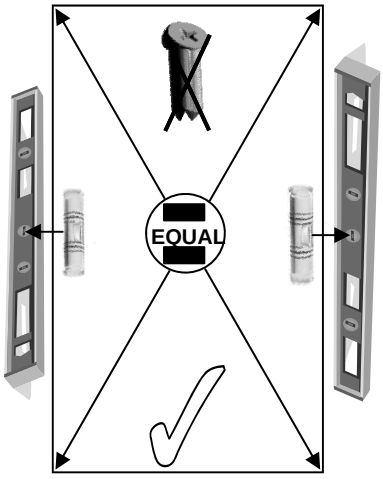
EQUAL

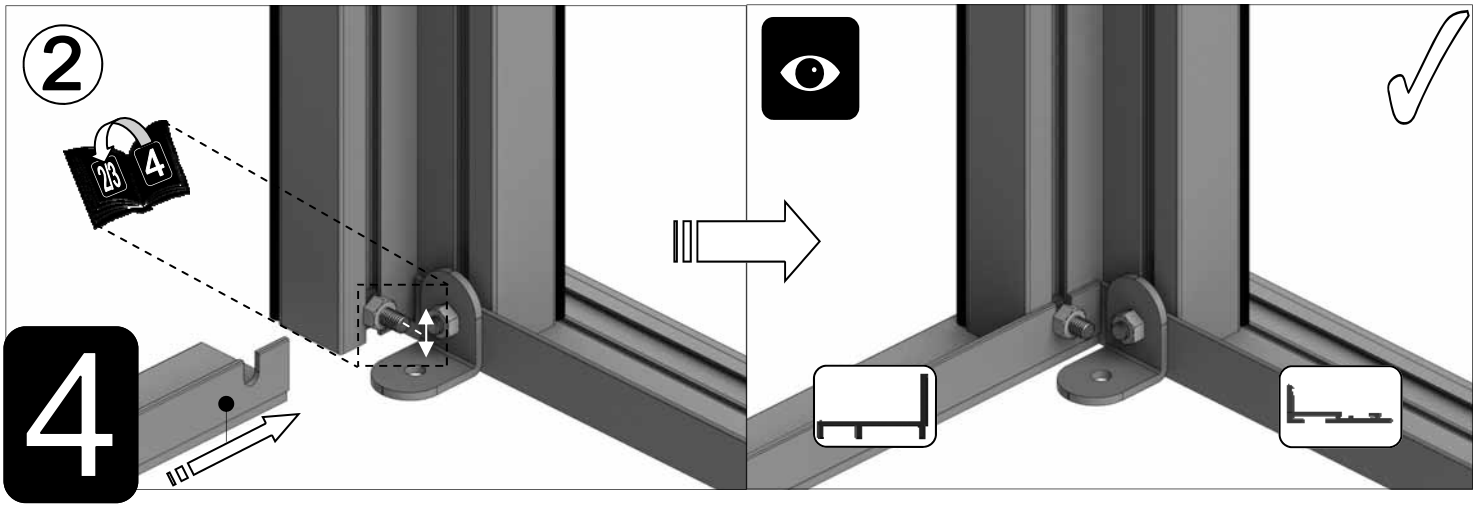
2
2
3
4
4

6’		8
Part No	mm	Quantity
D044	1897	1
D065	1744	4
D126	445	0
D128	1015	0
RUBBER	1000	14

8’		12
Part No	mm	Quantity
D001	2517	1
D065	1744	6
D126	445	2
D128	1015	1
RUBBER	1000	21

10’		16
Part No	mm	Quantity
D002	3137	1
D065	1744	8
D126	445	4
D128	1015	2
RUBBER	1000	28

12’		20
Part No	mm	Quantity
D003	3757	1
D065	1744	10
D126	445	6
D128	1015	2
RUBBER	1000	35

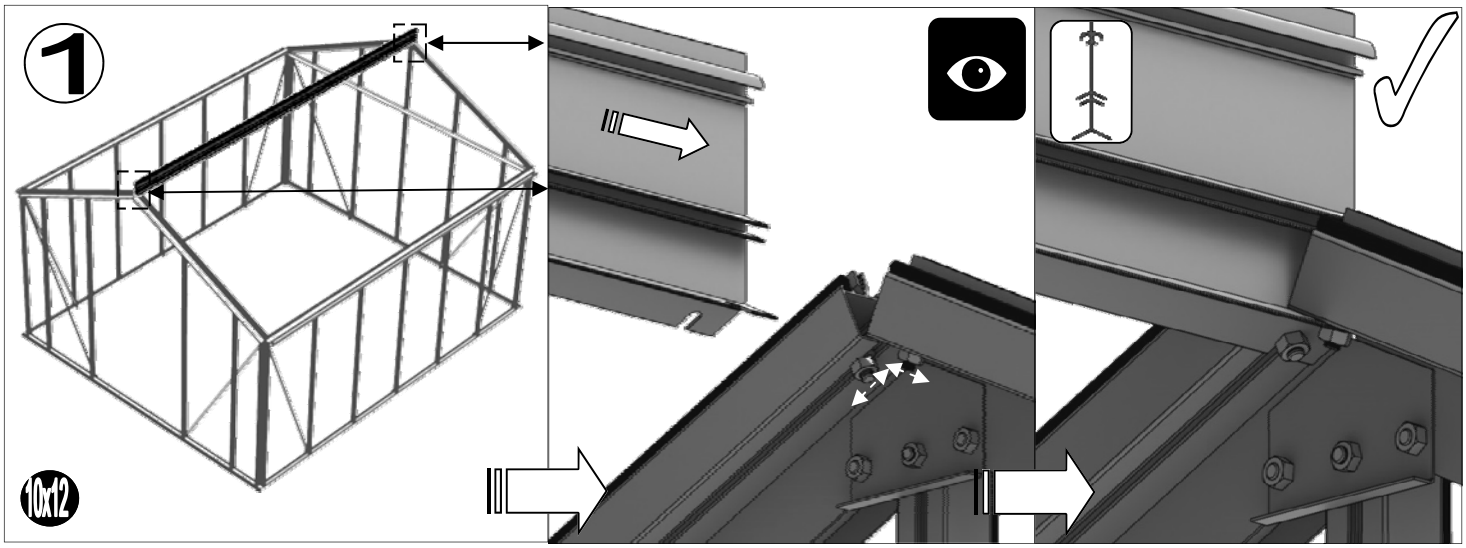

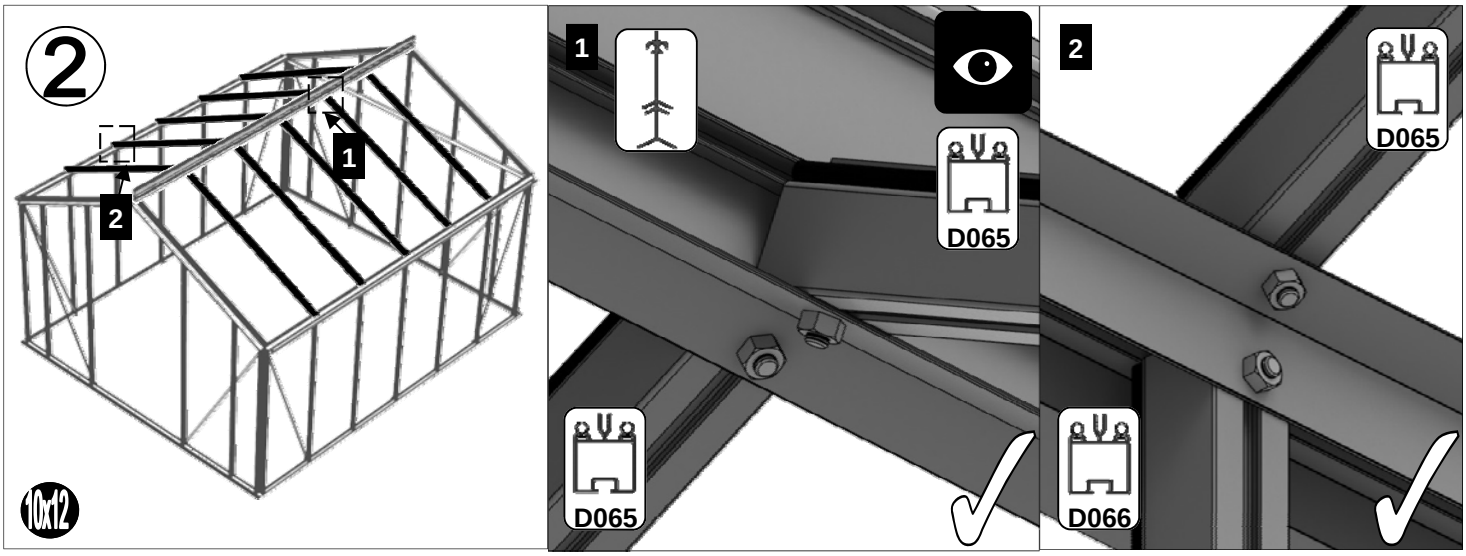

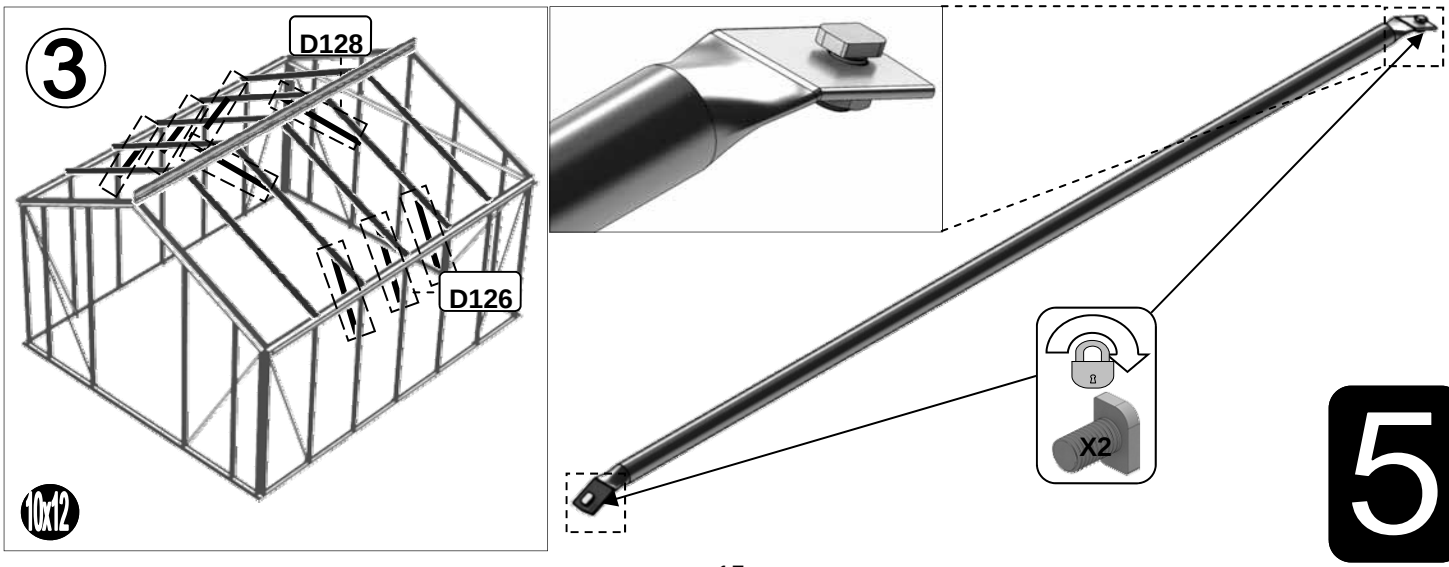

D1208
1 of -
610 x 610
pane

Part No		mm	Quantity
D866		639	1
D863L		613	1
D863R		613	1
D862	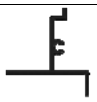	593	1

Part No		mm	Quantity
D220 PLUS FS6060 SCREW		N/A	2
D205		N/A	2
SY-BOLM6X11		10	4
SYNUTM6		M6	4
8 X 12 S/T FS6017		10	2
8 x 19 S/T FS6018		19	2

1

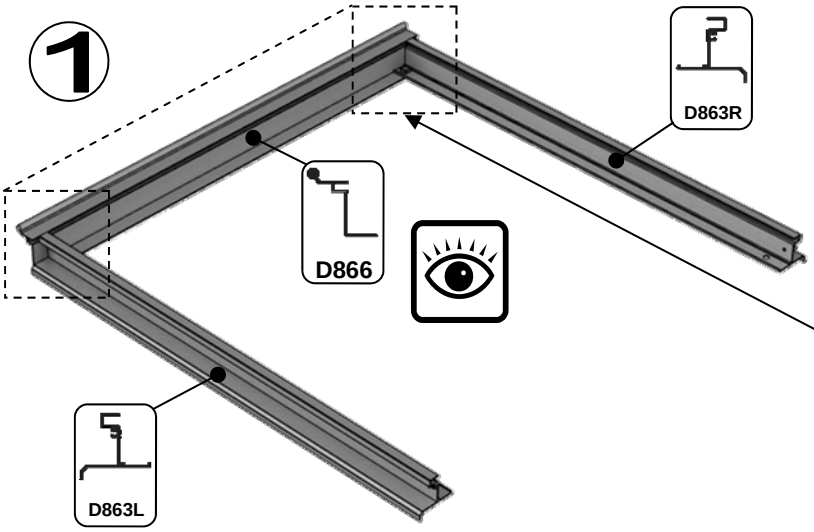

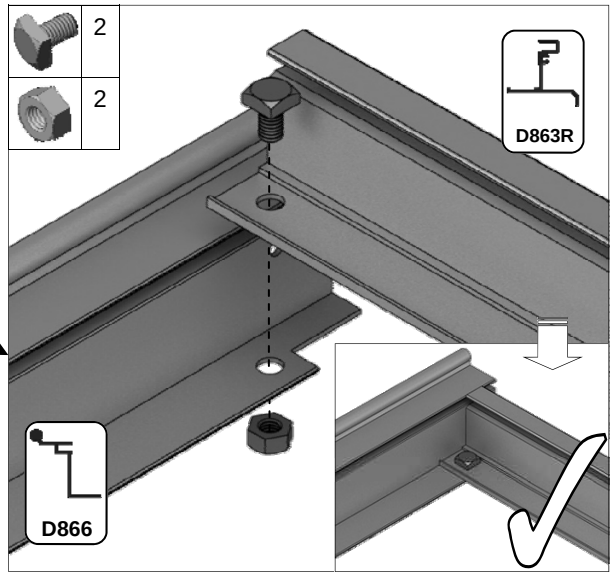

2

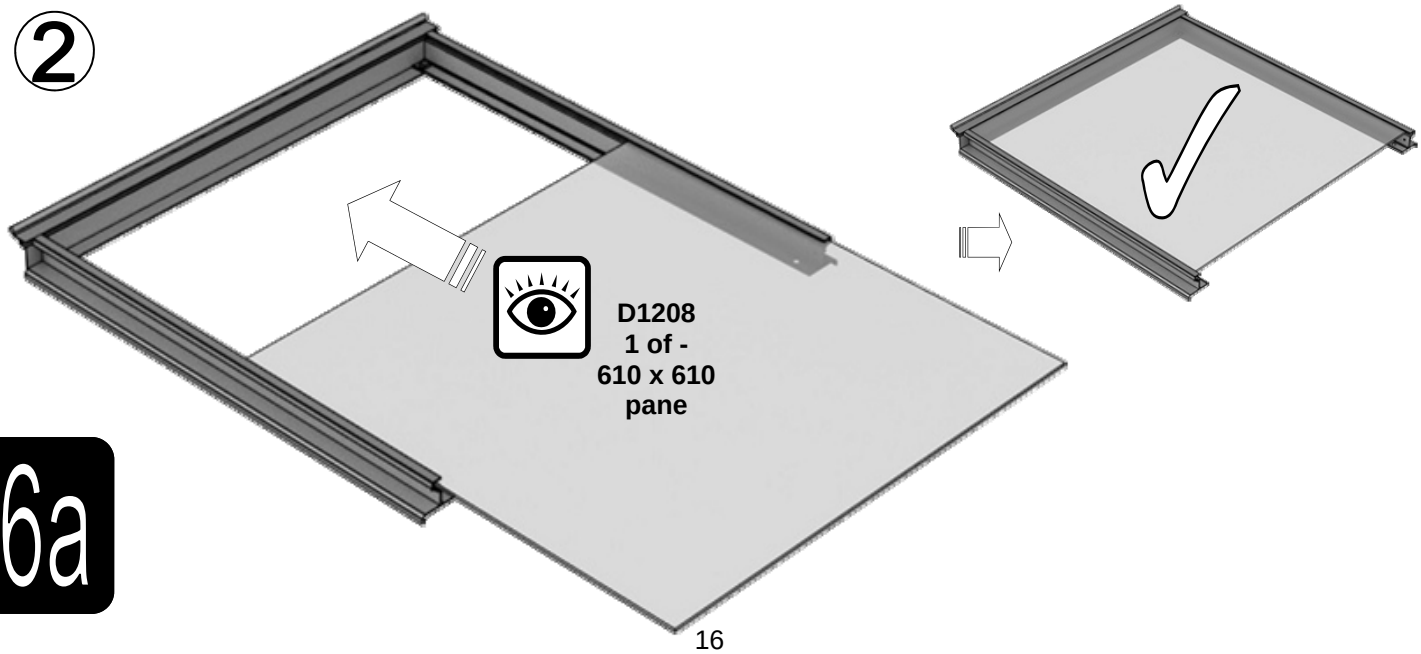

6a

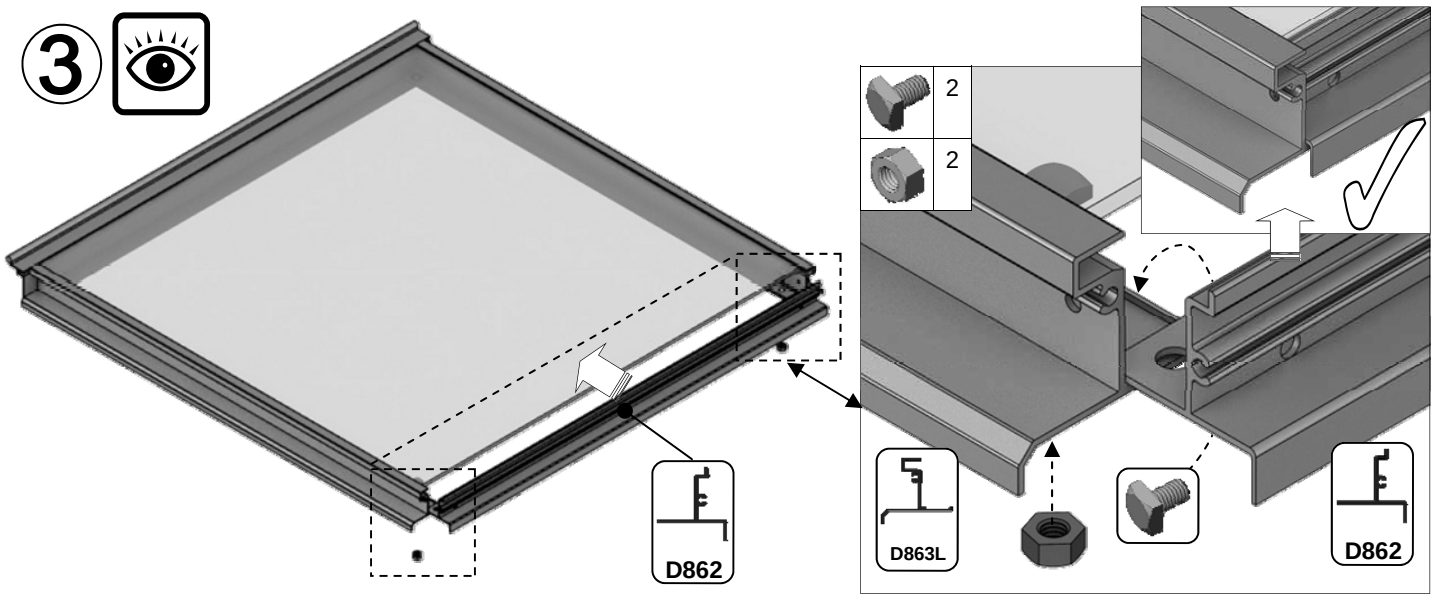
3
2
2
D862
D863L
D862

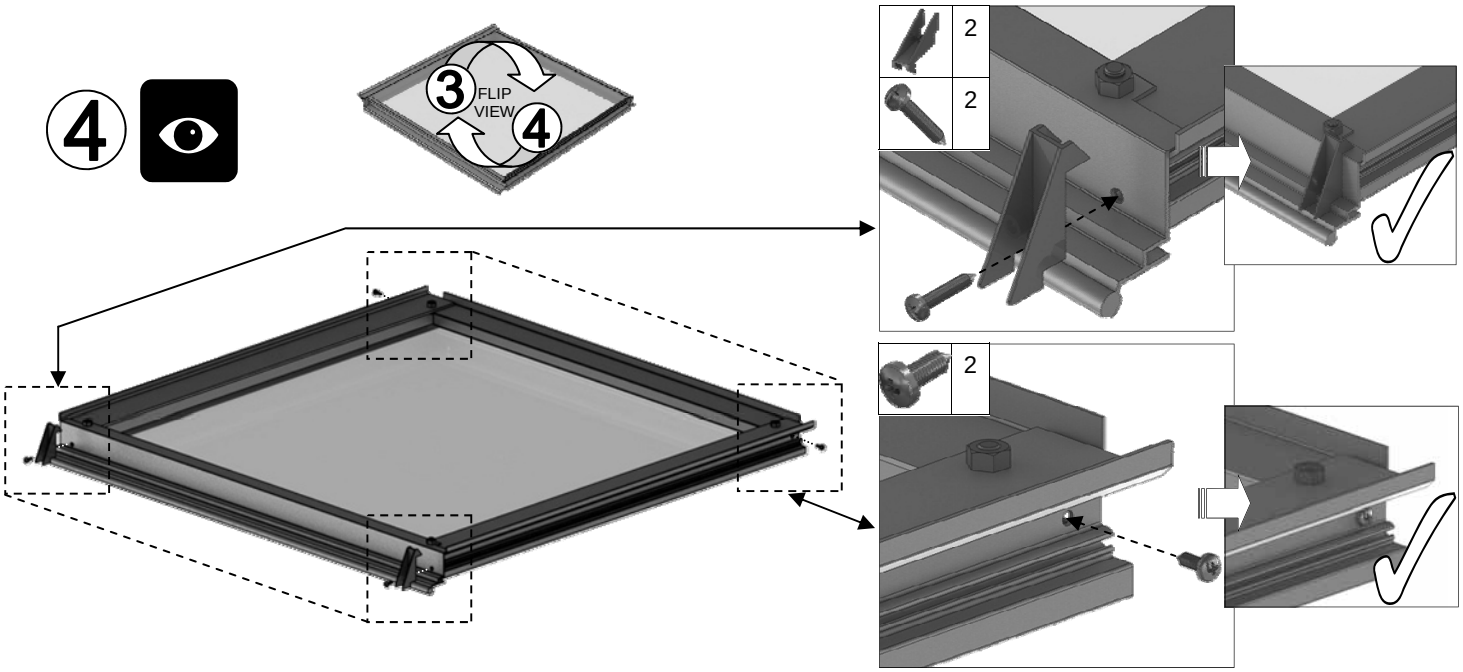
4
3
FLIP
VIEW
4
2
2
2

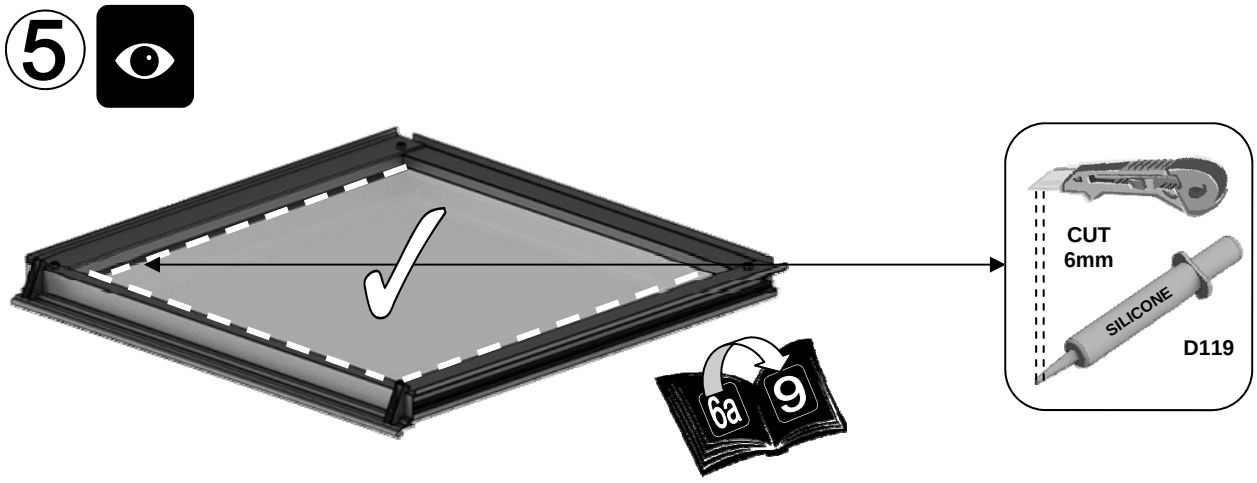
5
CUT
6mm
SILICONE
D119
6a
9

6a

1 vent slam bar = {

Part No		mm	Quantity
SY-BOLM6X11		10	2
SY-BOLM6X15		15	2
SYBOLM6X11CROP		10	2
SYNUTM6		N/A	4

Part No		mm	Quantity
D079 PLUS FLUFF		590	1
D114		N/A	2

6

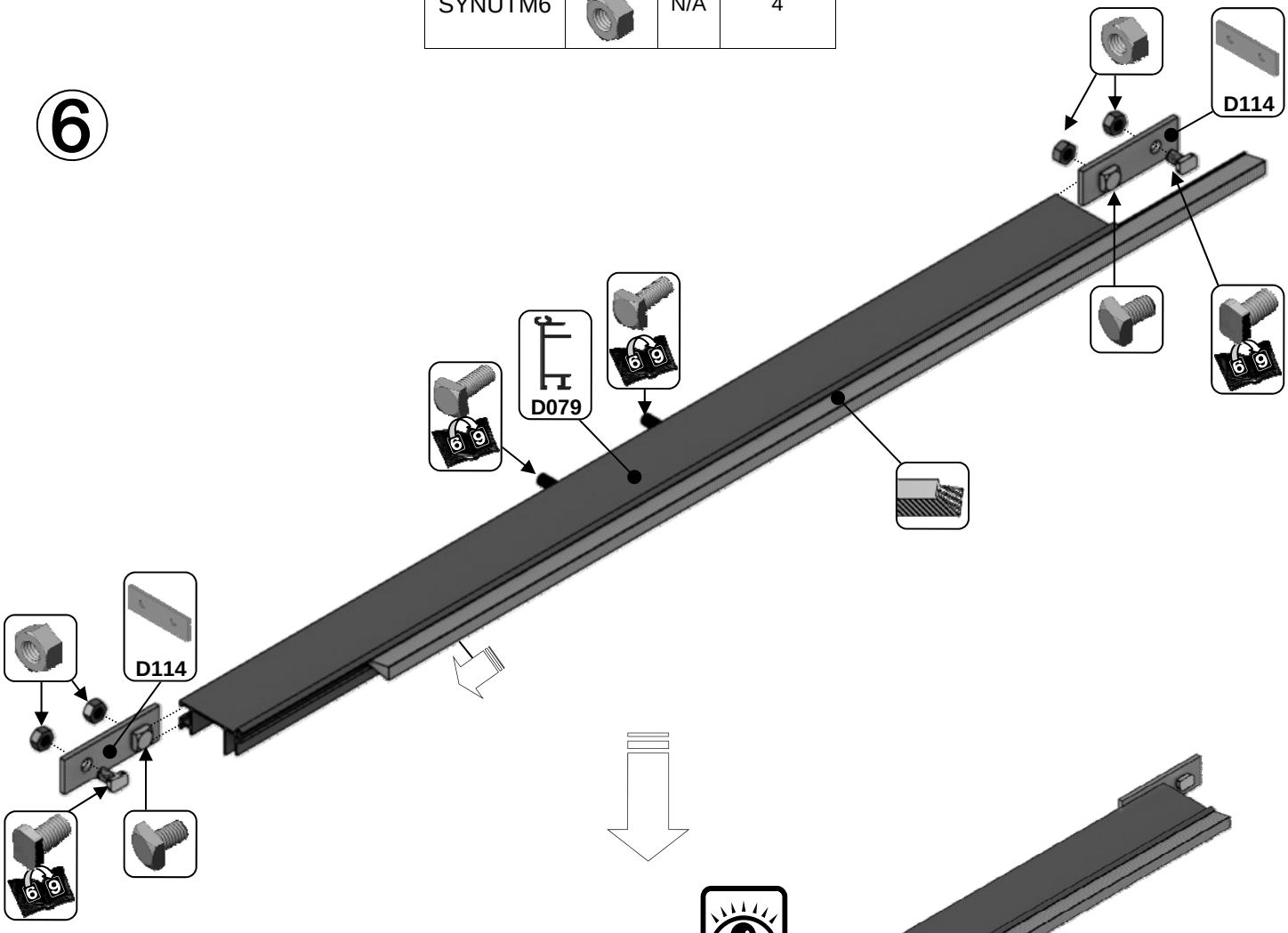

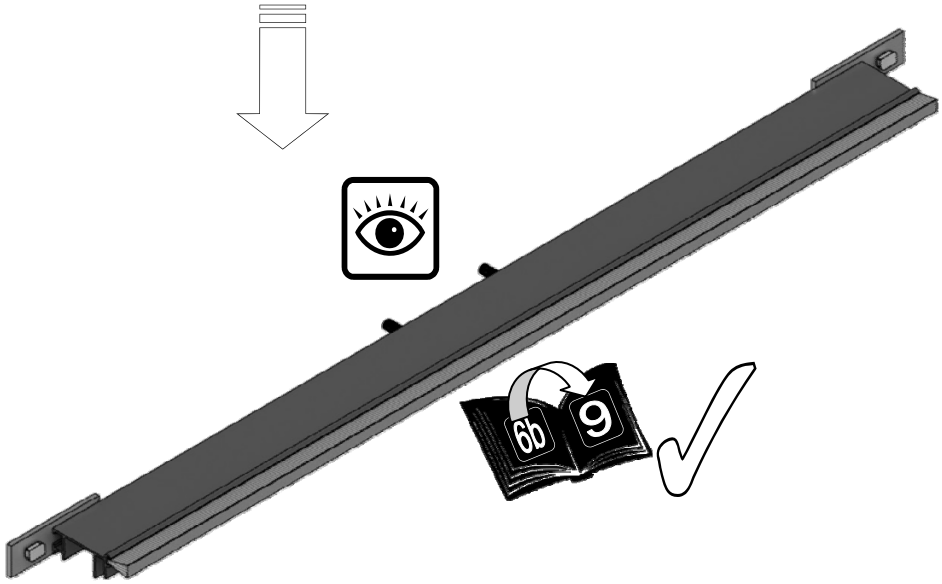

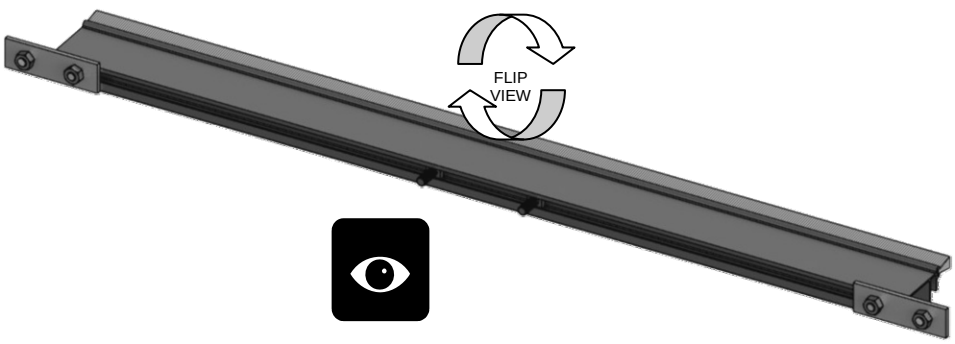

6b

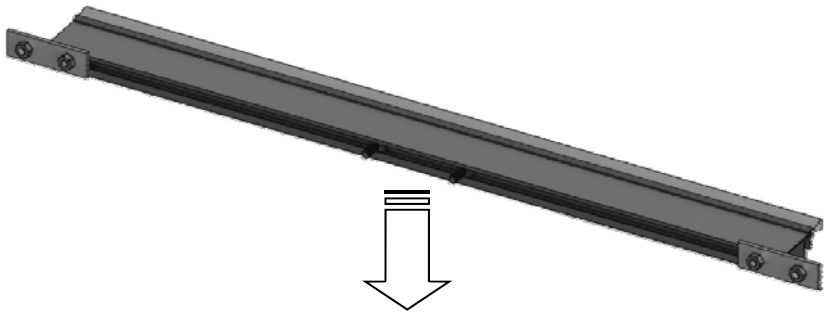

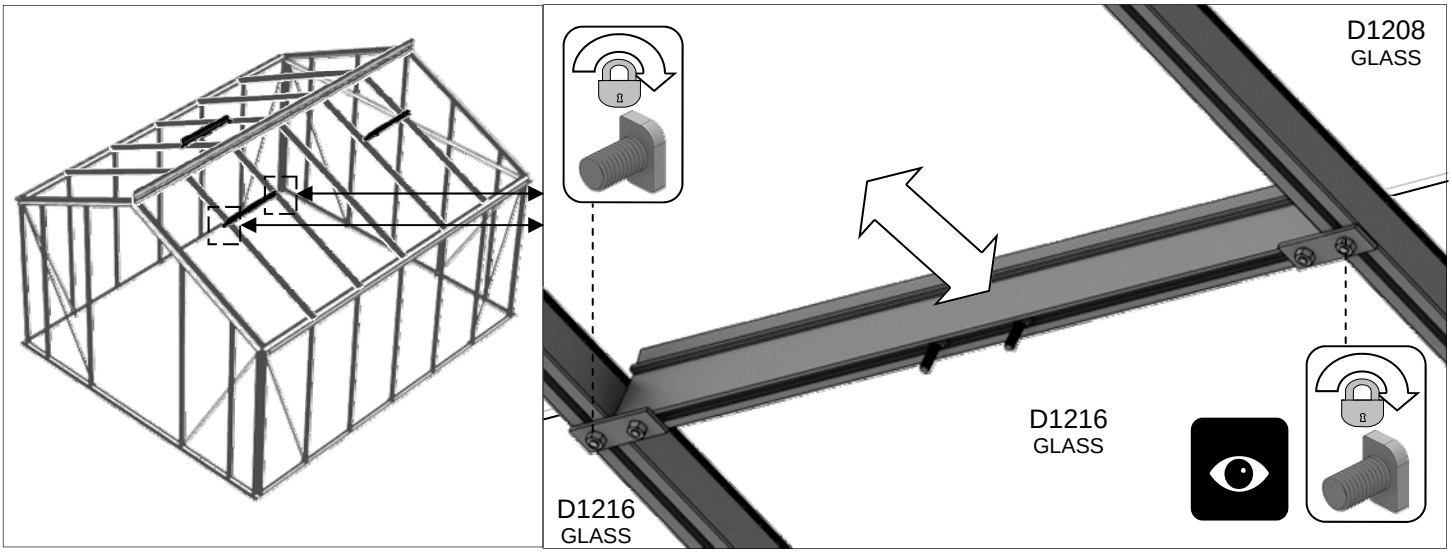

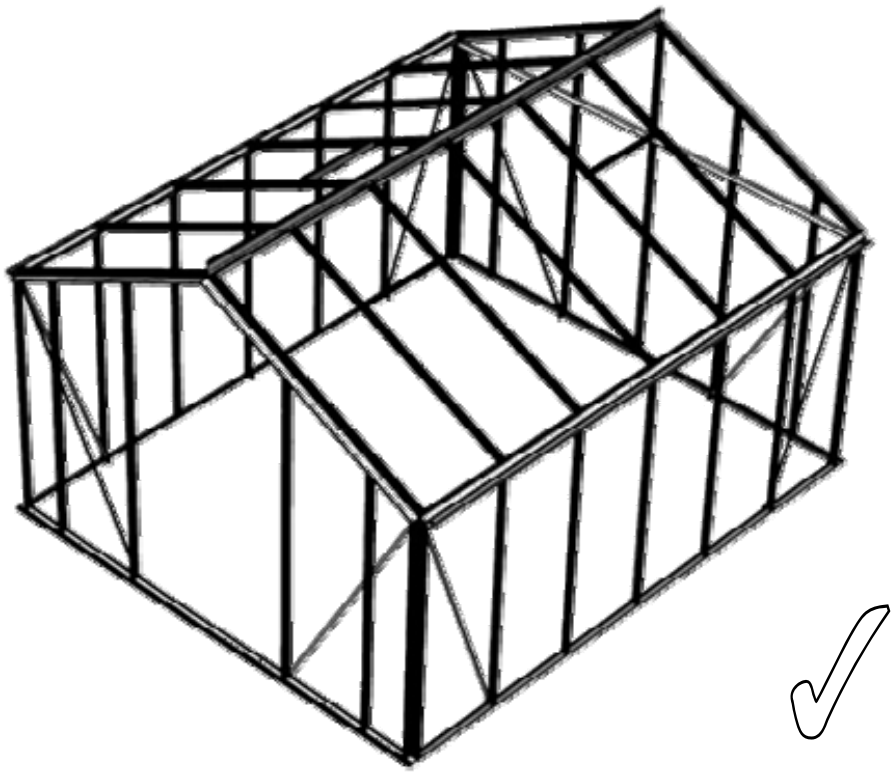

6b

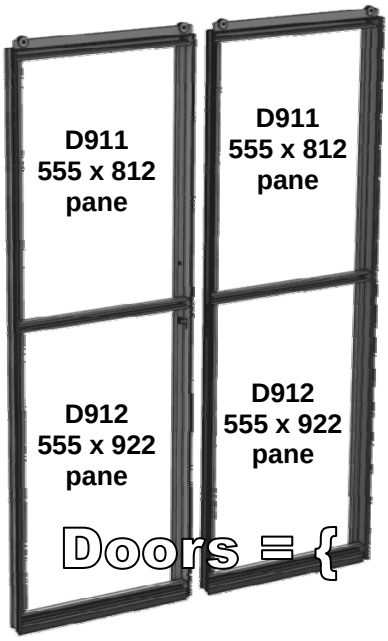

Part No		mm	Q
D094		1824	1
D090 + D347 lock = D301		1824	1
D092 + D156 strike = D303		1824	1
D093		1824	1
D096 + D217 wheel = D307		611	2
D095		611	2
D097		611	2

Part No		mm	Q
D232		905	4
D233		797	4
P053		N/A	2
D225		610	2
D840B		4000	. 1
D263 PACK x 2		N/A	14
		N/A	14
D261 PACK		N/A	24

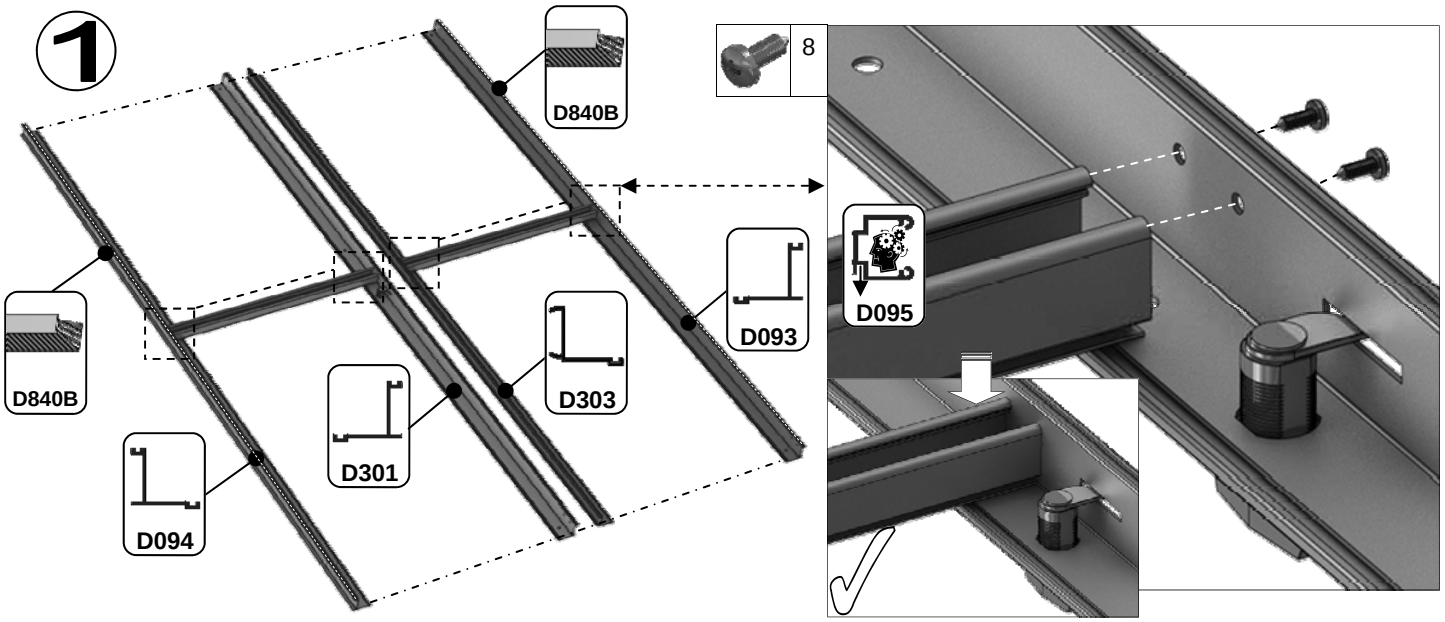

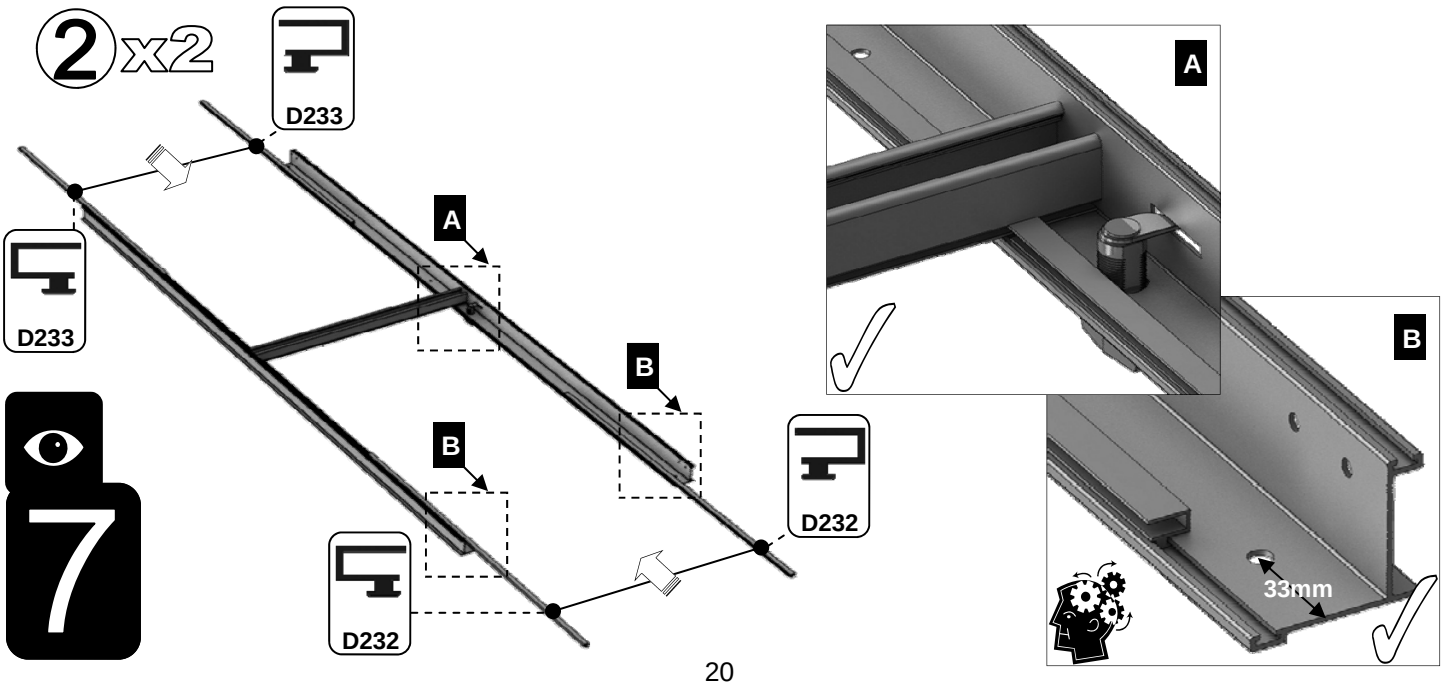

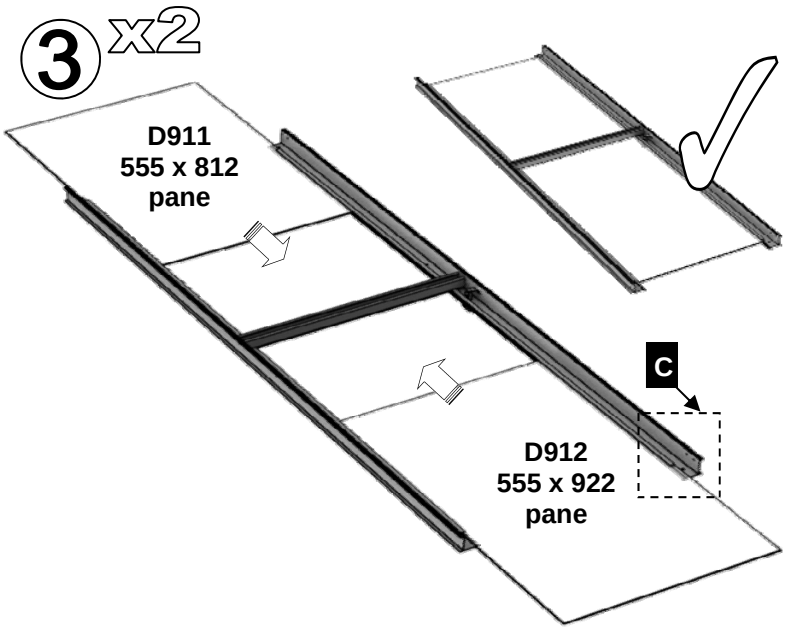
3 x2
D911
555 x 812
pane
C
D912
555 x 922
pane

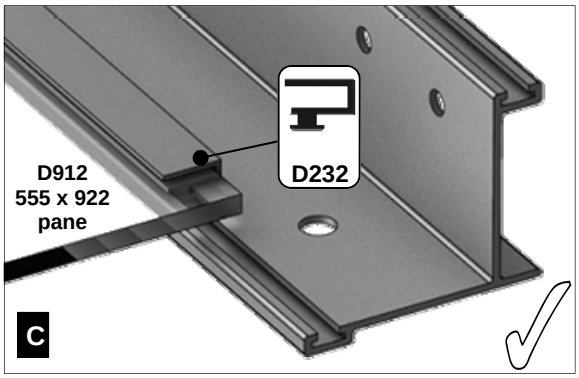
D912
555 x 922
pane
D232
C

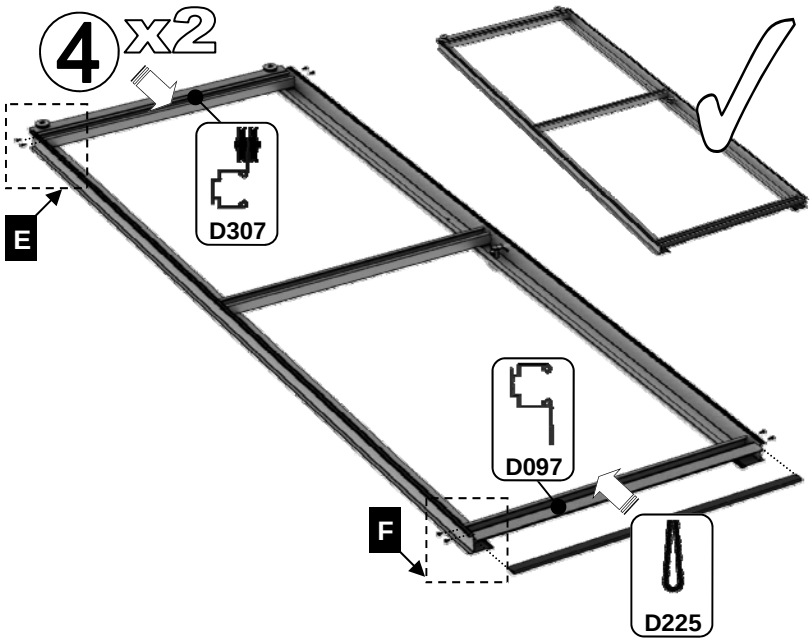
4 x2
E
D307
D097
F
D225

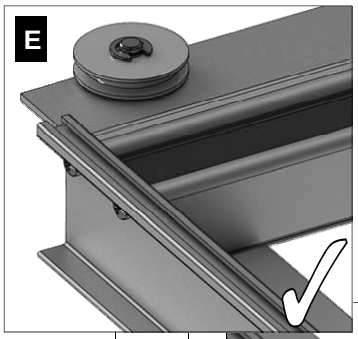
E

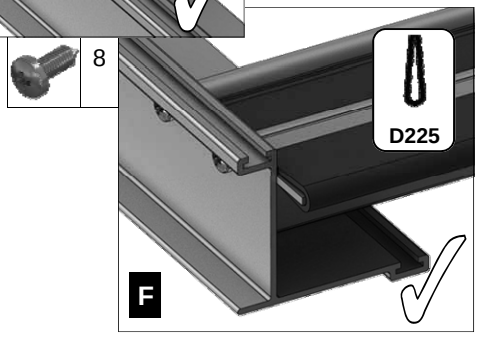
8
D225
F

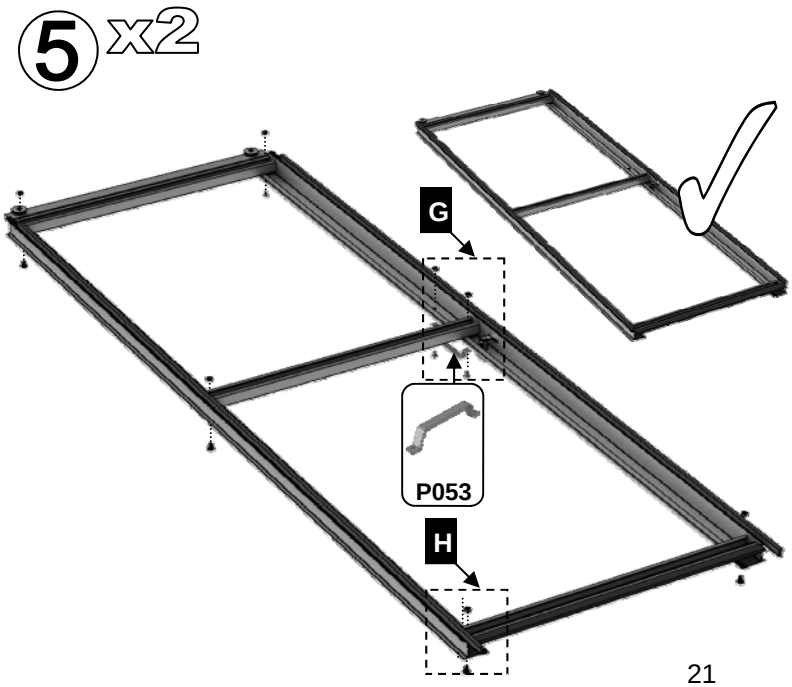
5 x2
G
P053
H

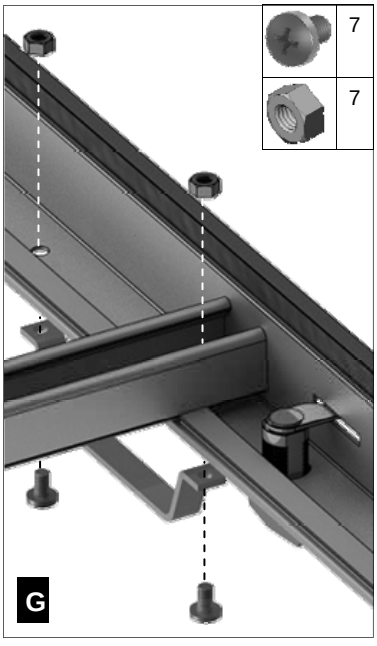
7
7
G

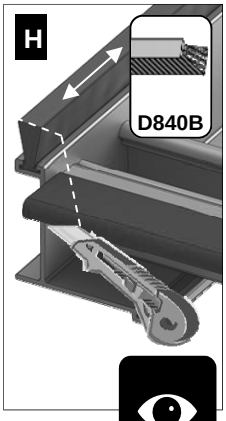
H
D840B

PART No	Section	Size (mm)
D812		1660
D815		1830
D818		2126
D819		227
D822		2422
D823		516
D870		601
D876		1152
D813		1675
D814		1883
D834		1660
D871		601
D877		1152
D811		1754
D825		1660
D826		1677
D827		1832
D829		2128
D832		2424
D833		518
D836		1883
D846		229

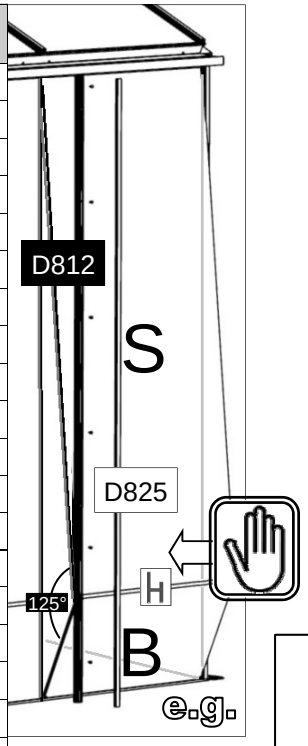

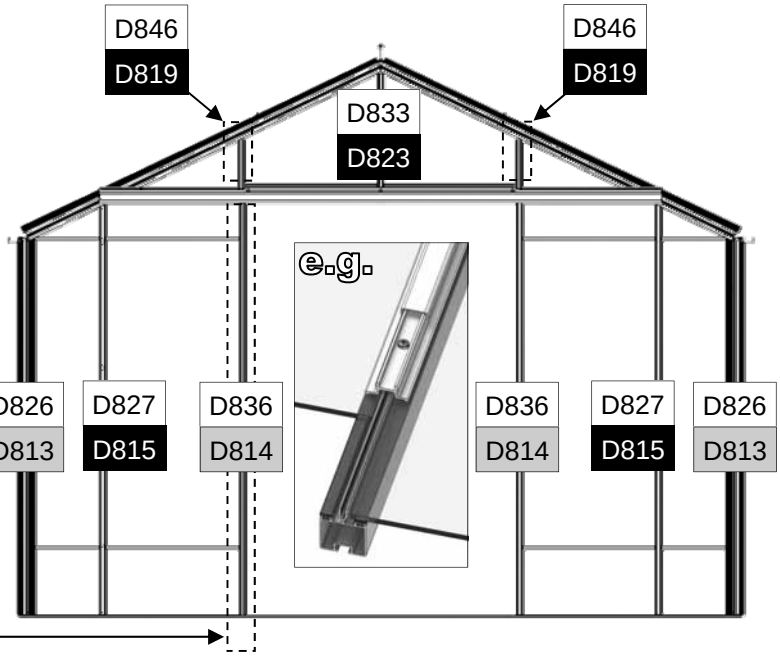

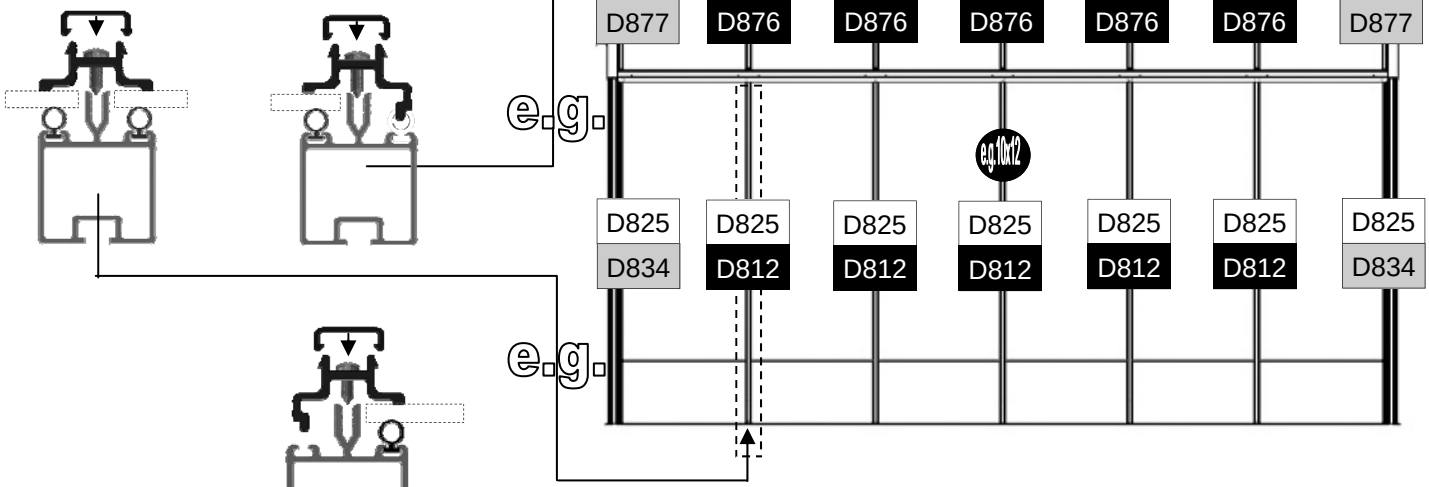

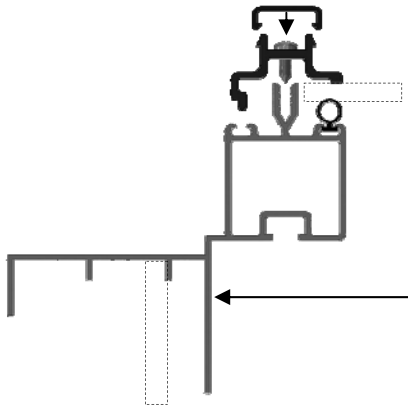

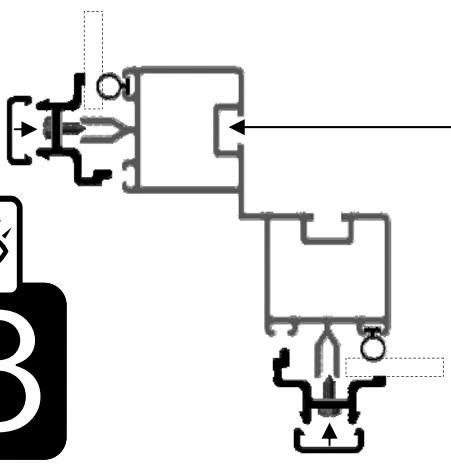

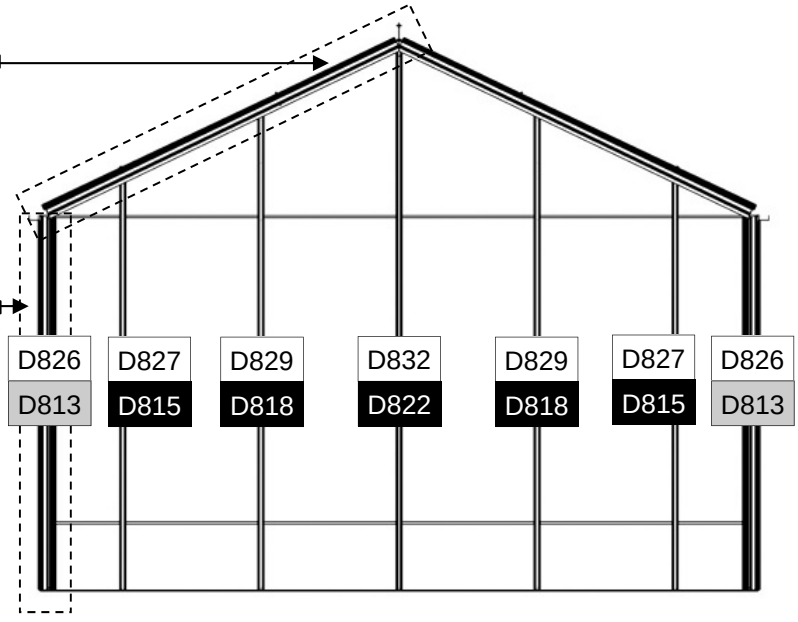

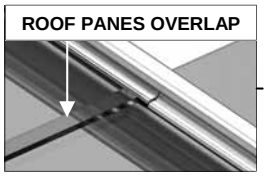

ROSETTE TOUGHENED GLASS

e.g. 10x12

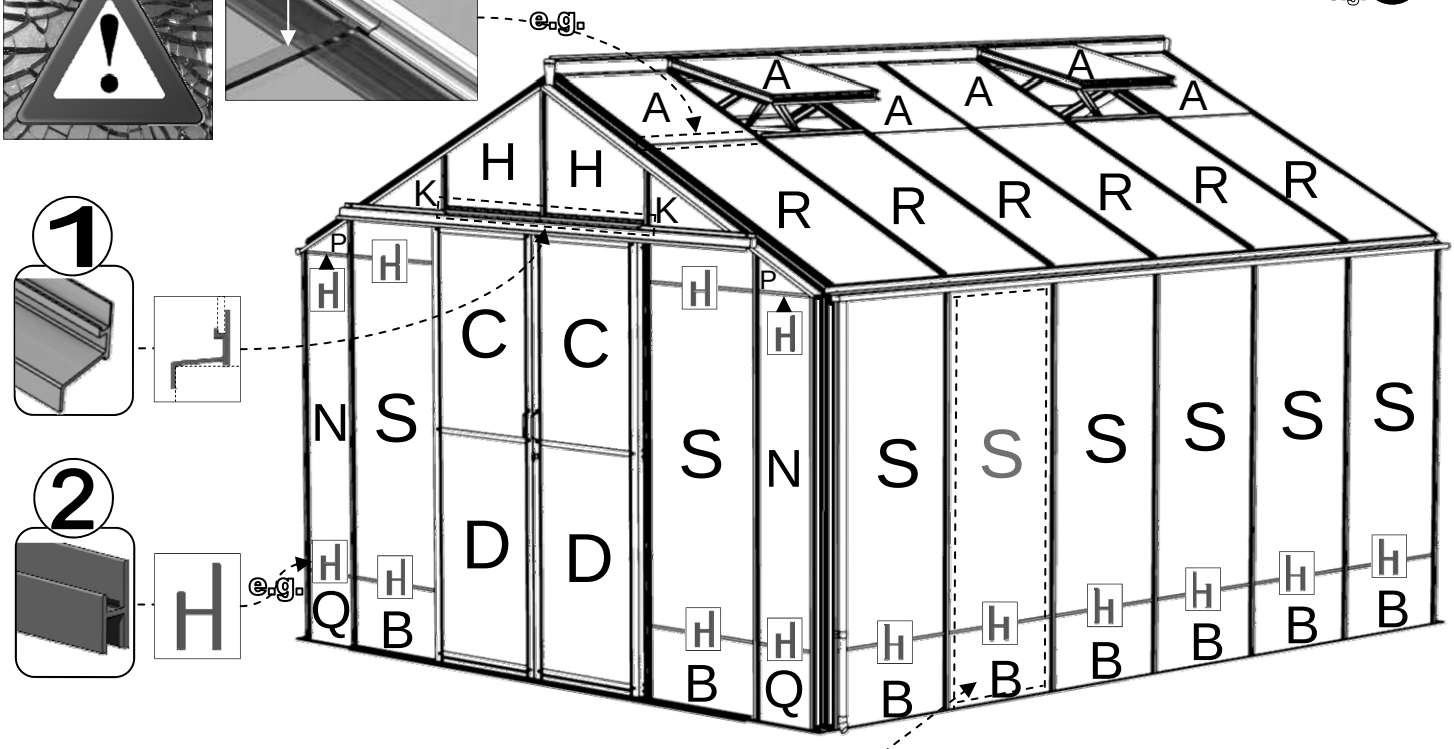

PART No		Size (mm)	6'	8'	10'	12'
D1206	S	610 X 1374	11	12	14	16
D1216	R	610 X 1162	6	8	10	12
D1208	A	610 X 610	6	8	10	12
D1254	B	610 X 305	12	14	16	18
D904	N	305 X 1374	4			
D905	Q	305 X 305	4			
D911	C	555 X 812	2			
D912	D	555 X 922	2			
D902	P	ANGLE	4			
D901	K	ANGLE	4			
D907	J	ANGLE	2			
D1236	H	ANGLE	2			
D223/B		1210	1			
D101 / ROSEPS	H	610 long (inc cuts to 305mm)	22	24	26	28

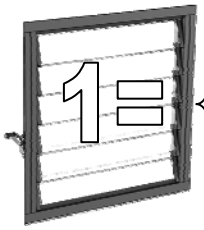

D906	M	610 X 762	1
D729TG	L	525 X 100	6
D101 / ROSEPS	H	610 long	1

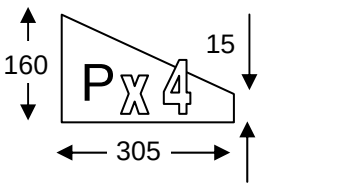

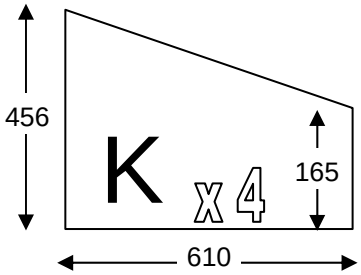

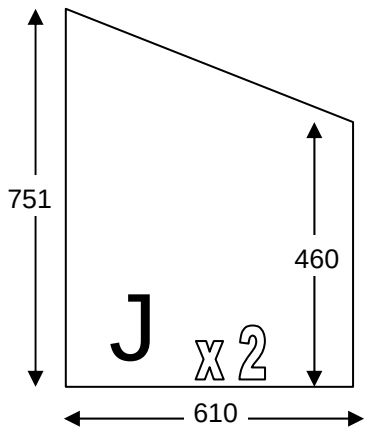

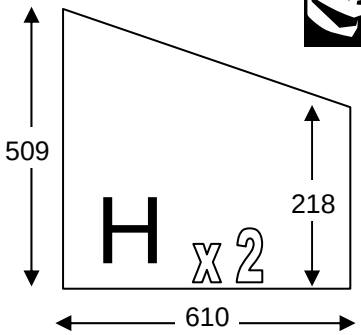

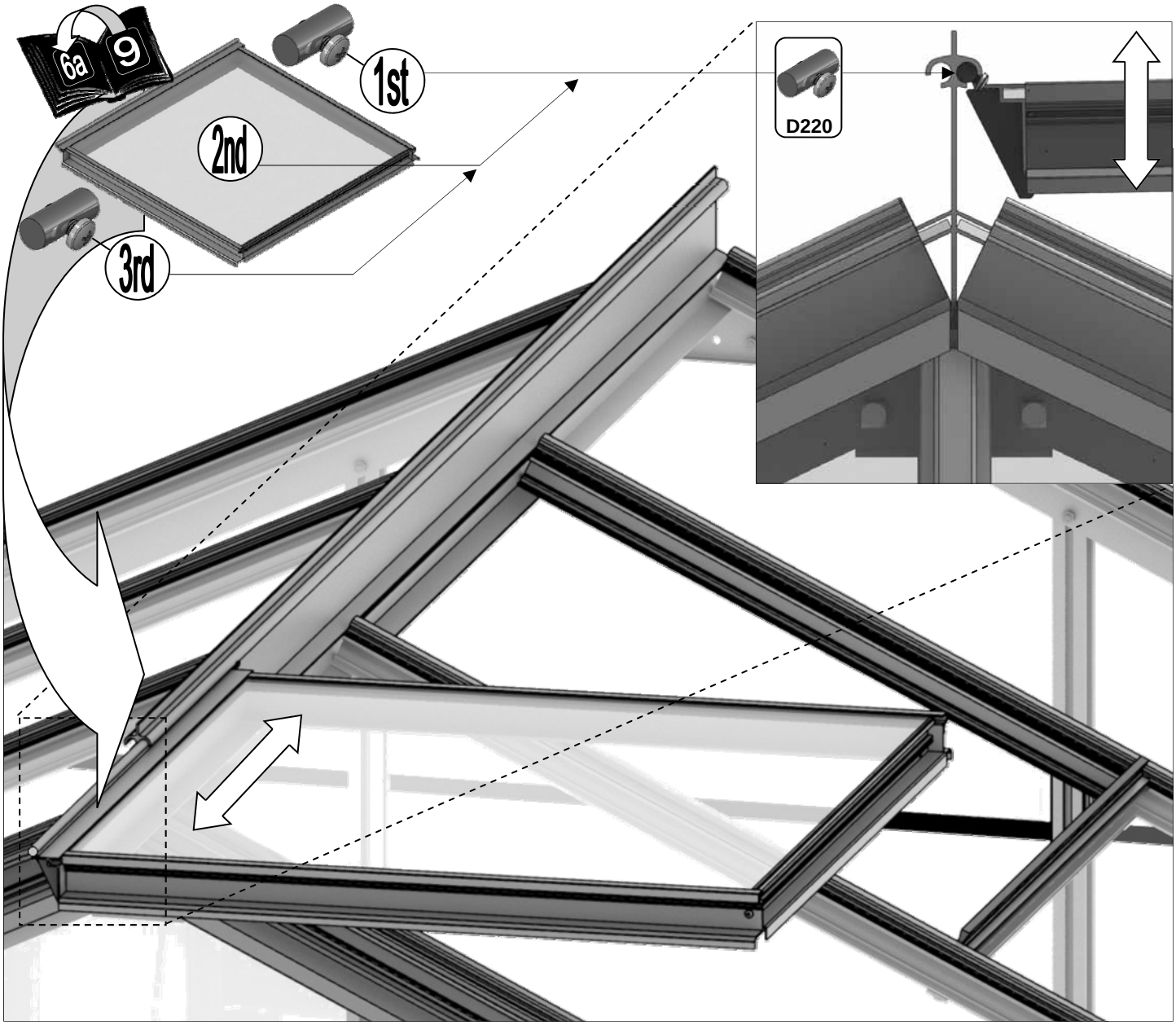
6a
9
1st
2nd
3rd
D220

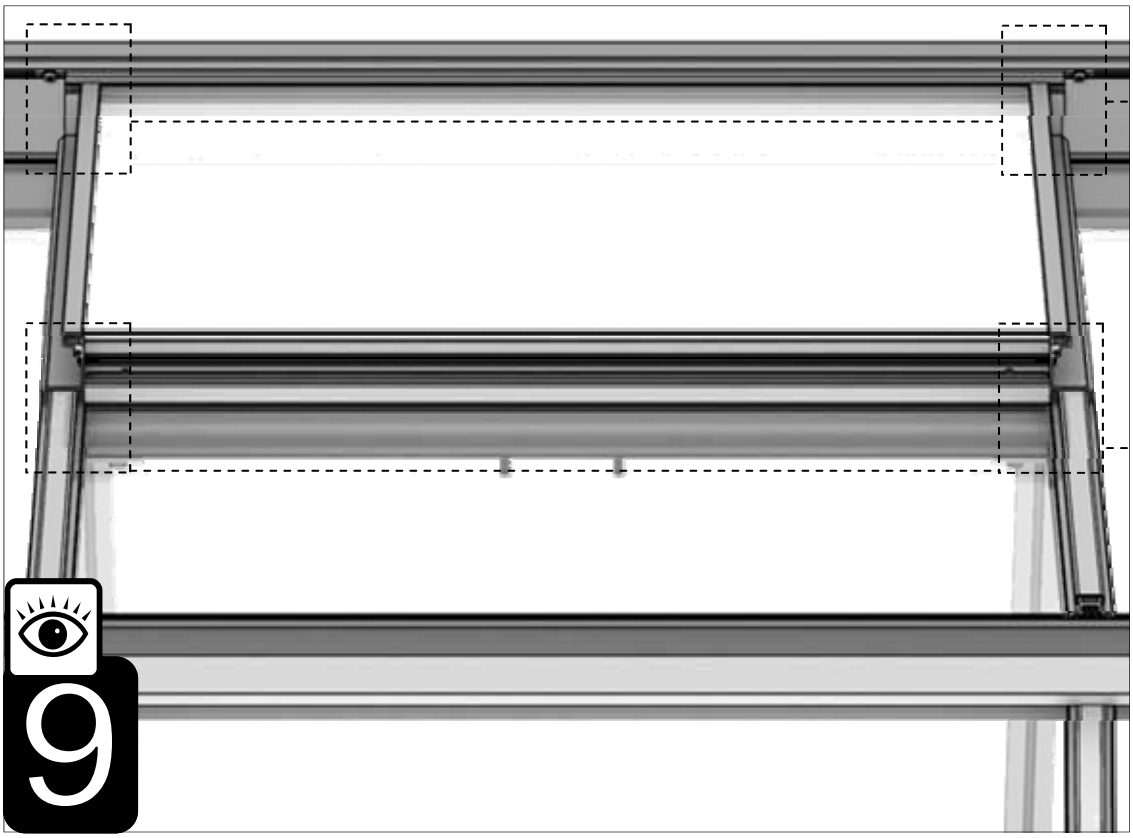

D220

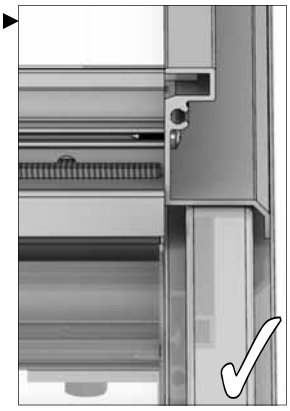

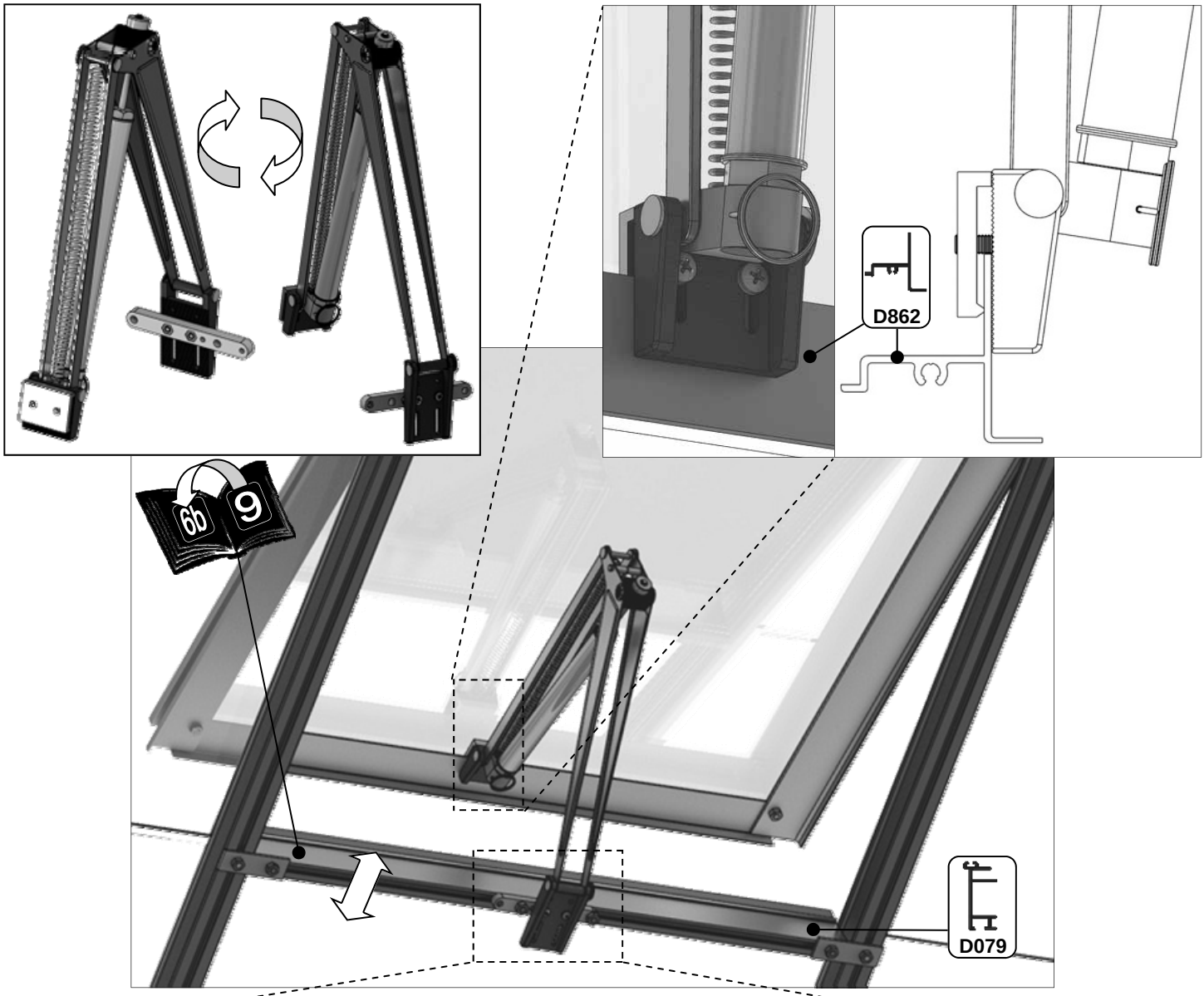

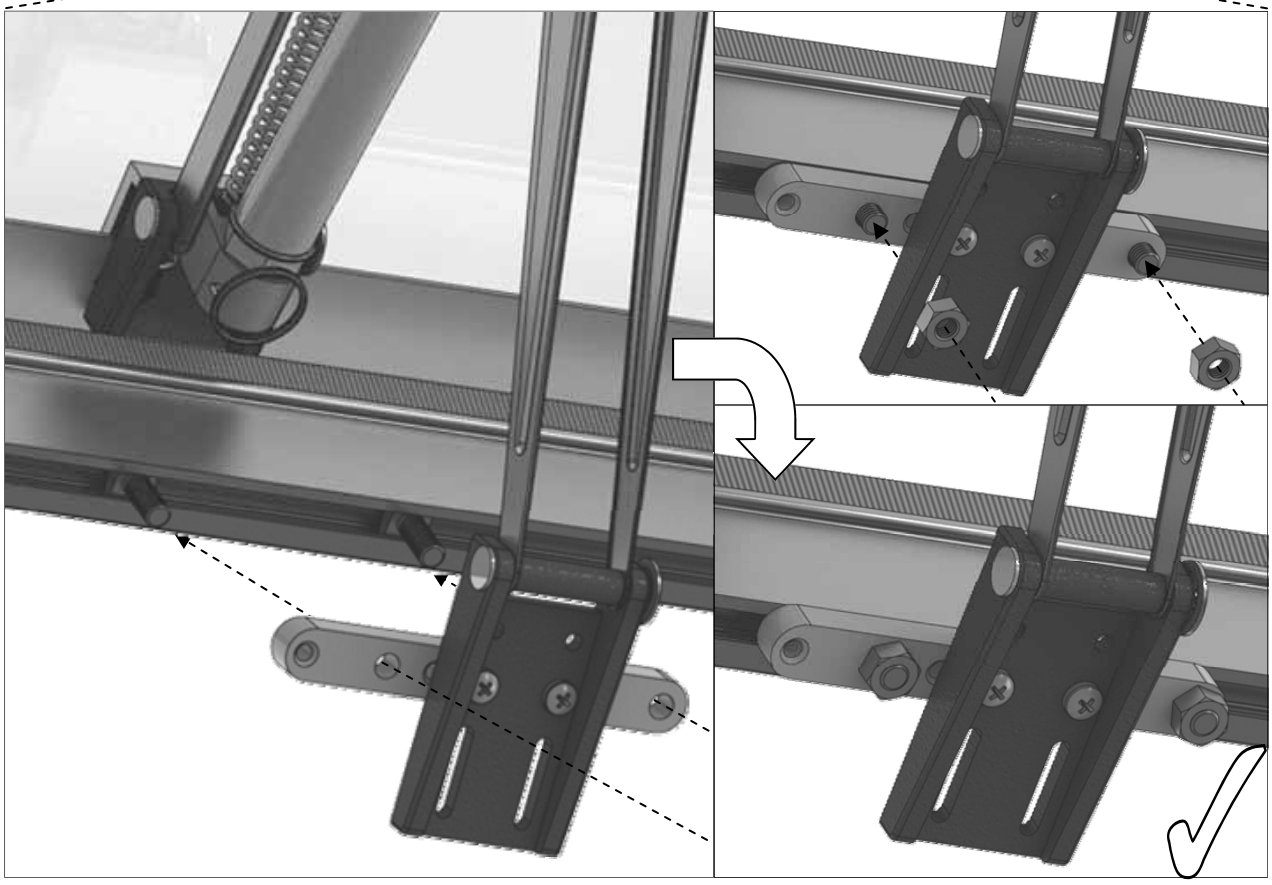

9

Part No		mm	Q
D865		1210	1
D086		2510	1
D085		2510	1

Part No		mm	Q
D163		90	2
D150			1
D154			2
D845			2
SY-BOLM6X15			15
SYNUTM6			15

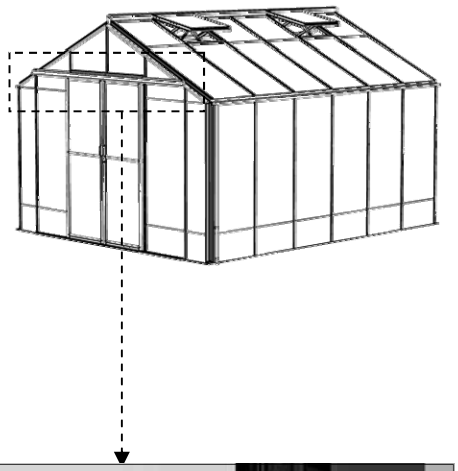

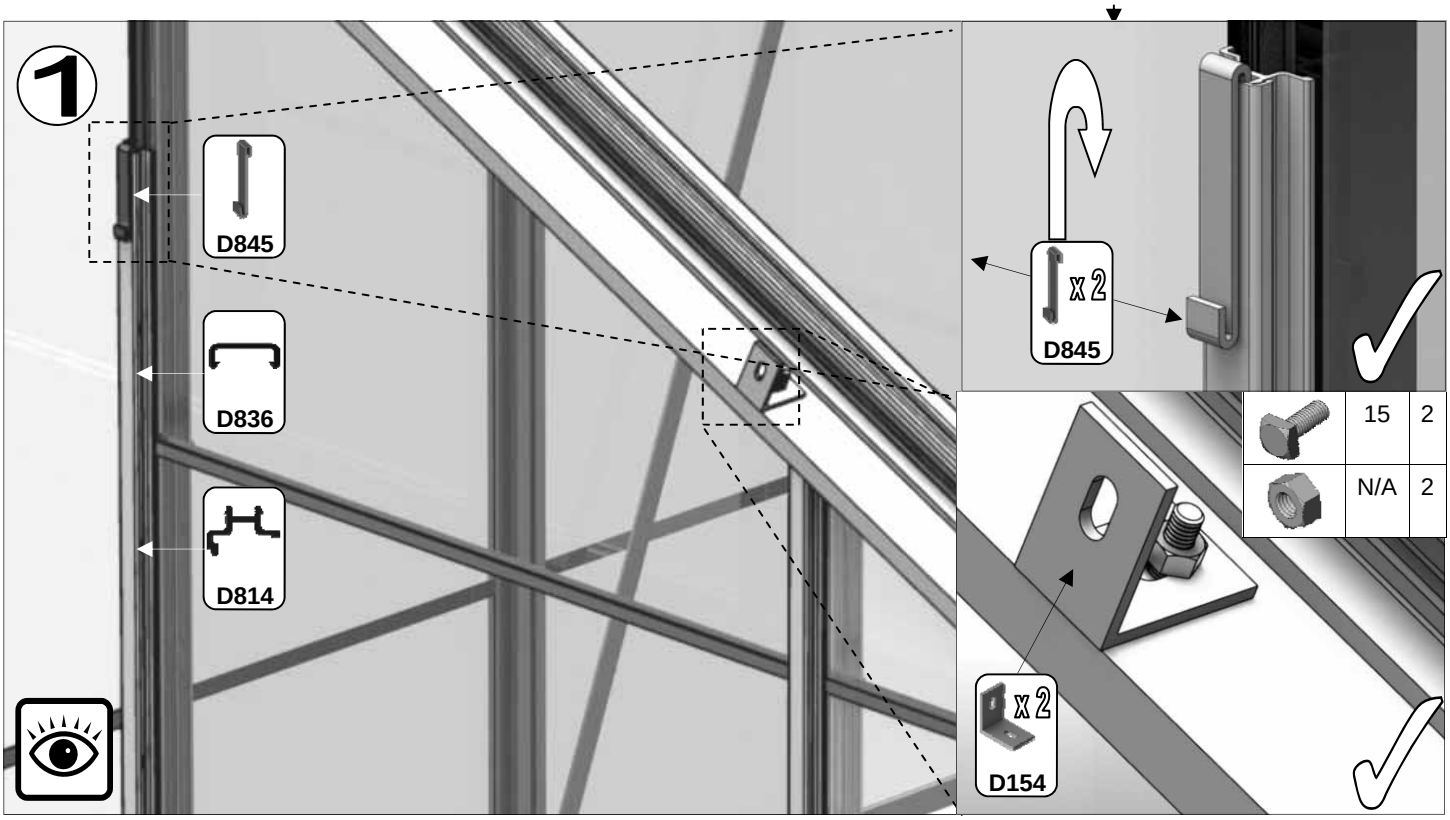

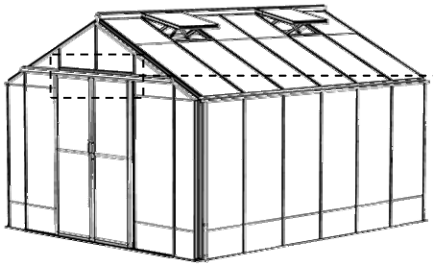

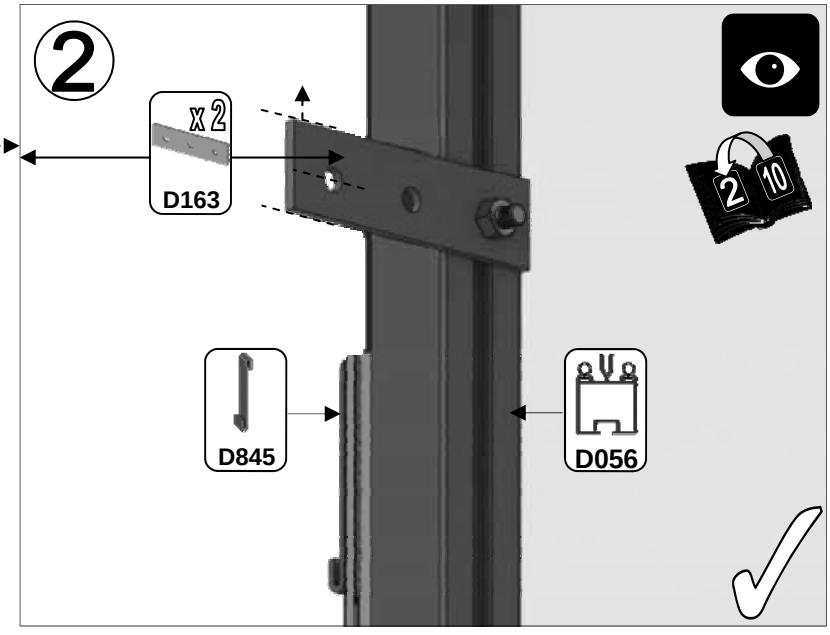

10

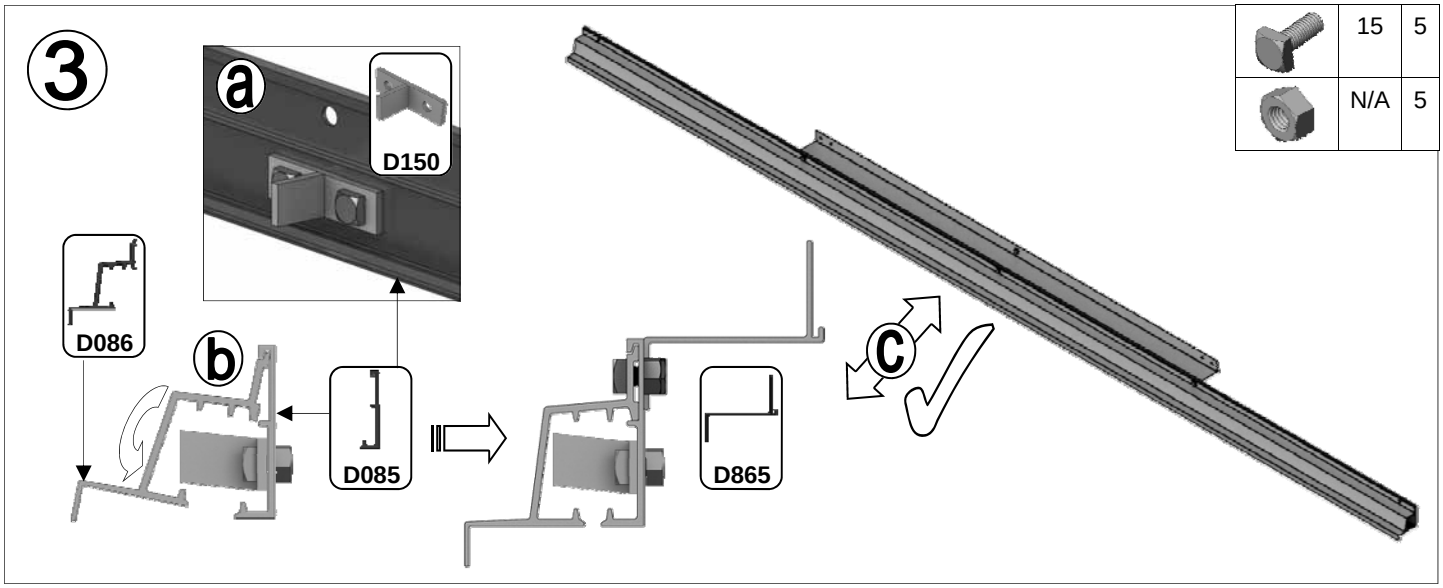
3
a
D150
D086
b
D085
D865
c
15
5
N/A
5

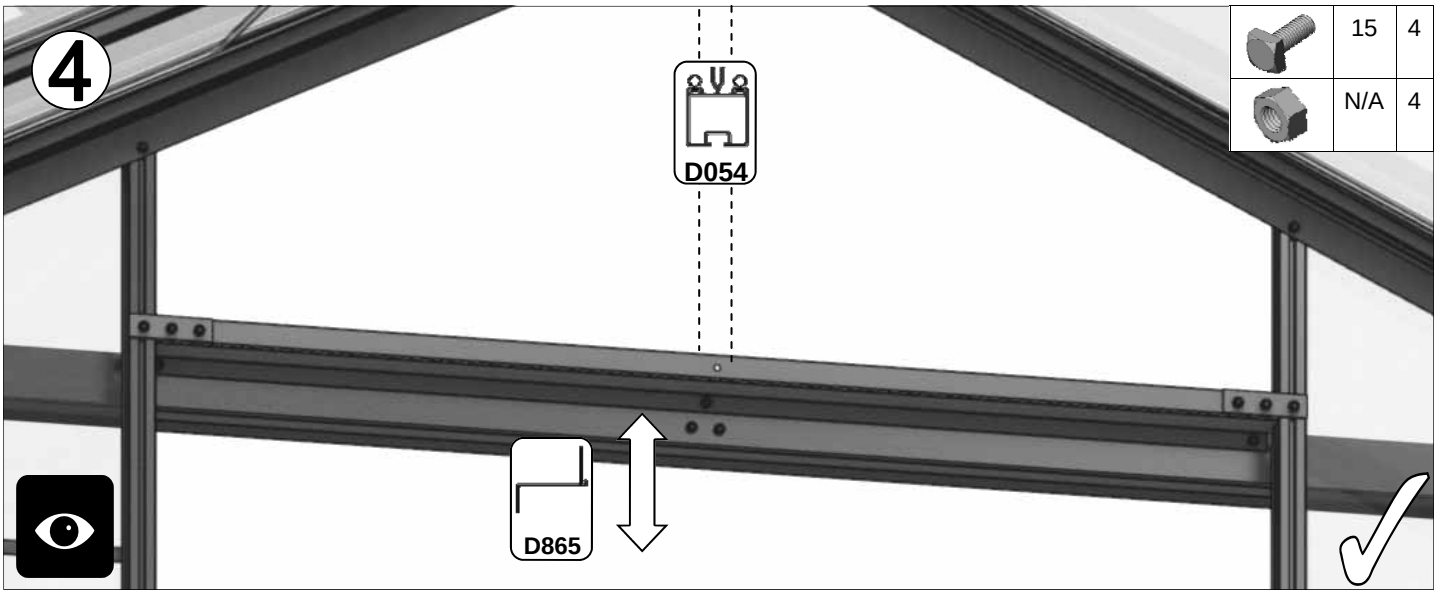
4
D054
D865
15
4
N/A
4

5
x 2
D154
15
4
N/A
4
10

Part No		Q
D861		1
D088	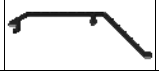	1

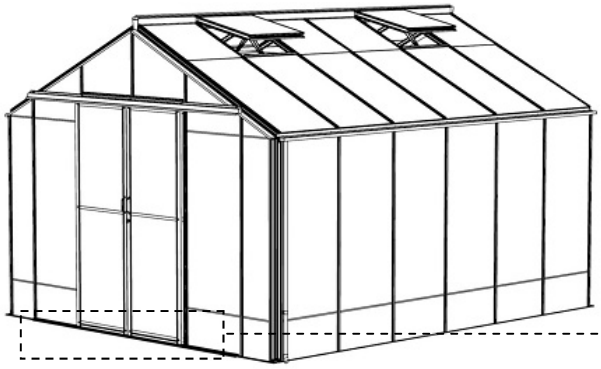

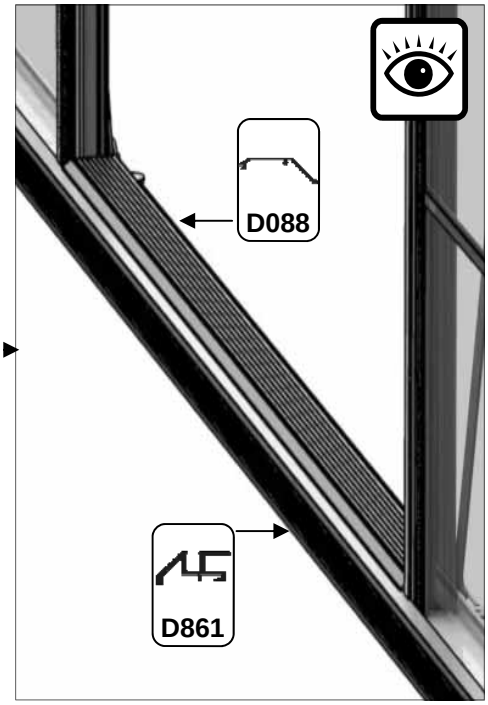

6

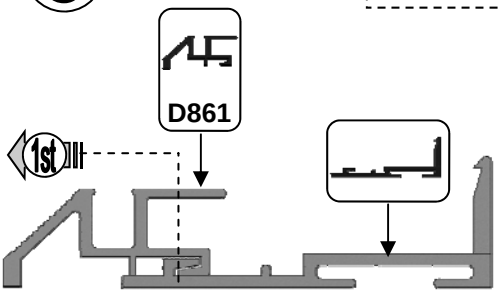

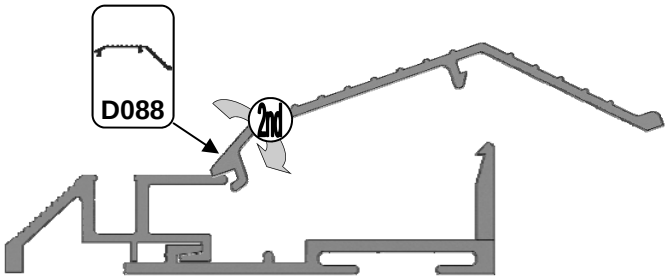

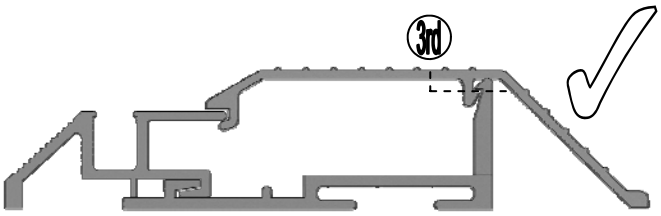

7

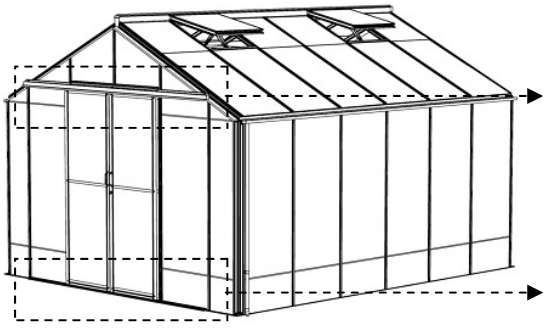

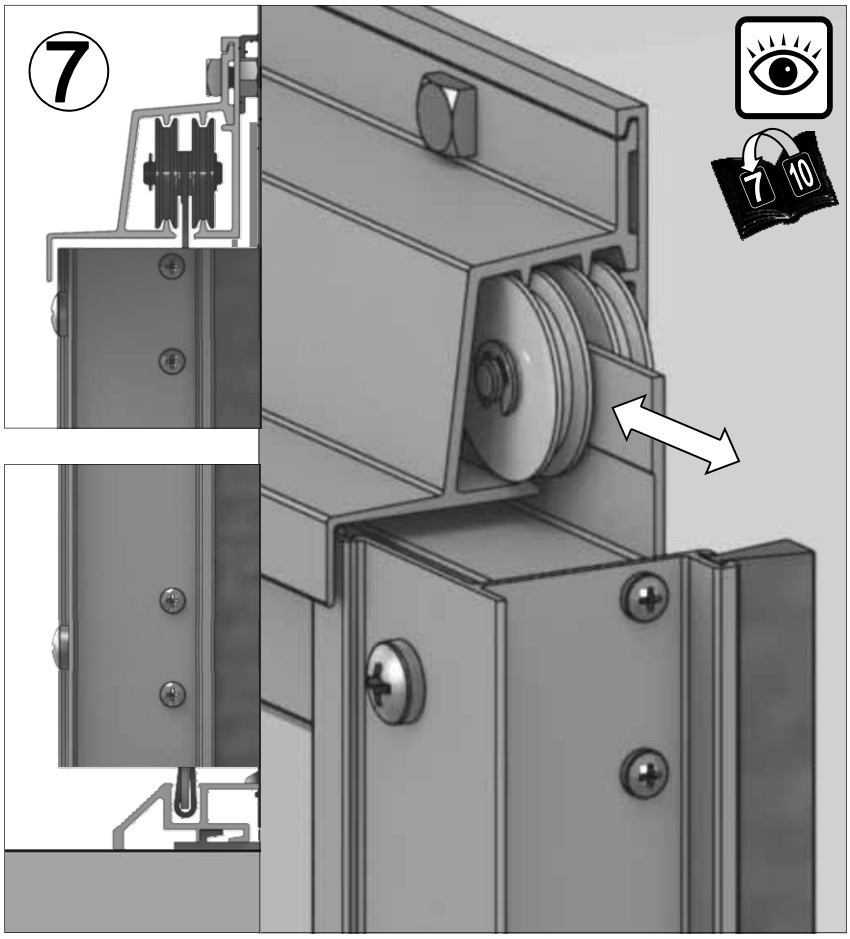

10

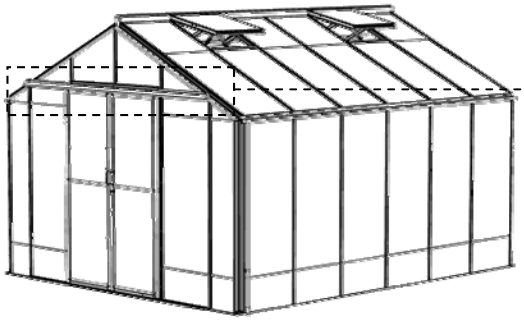

Part No		Q
D312		2
D204L /B		1
D204R /B		1

8

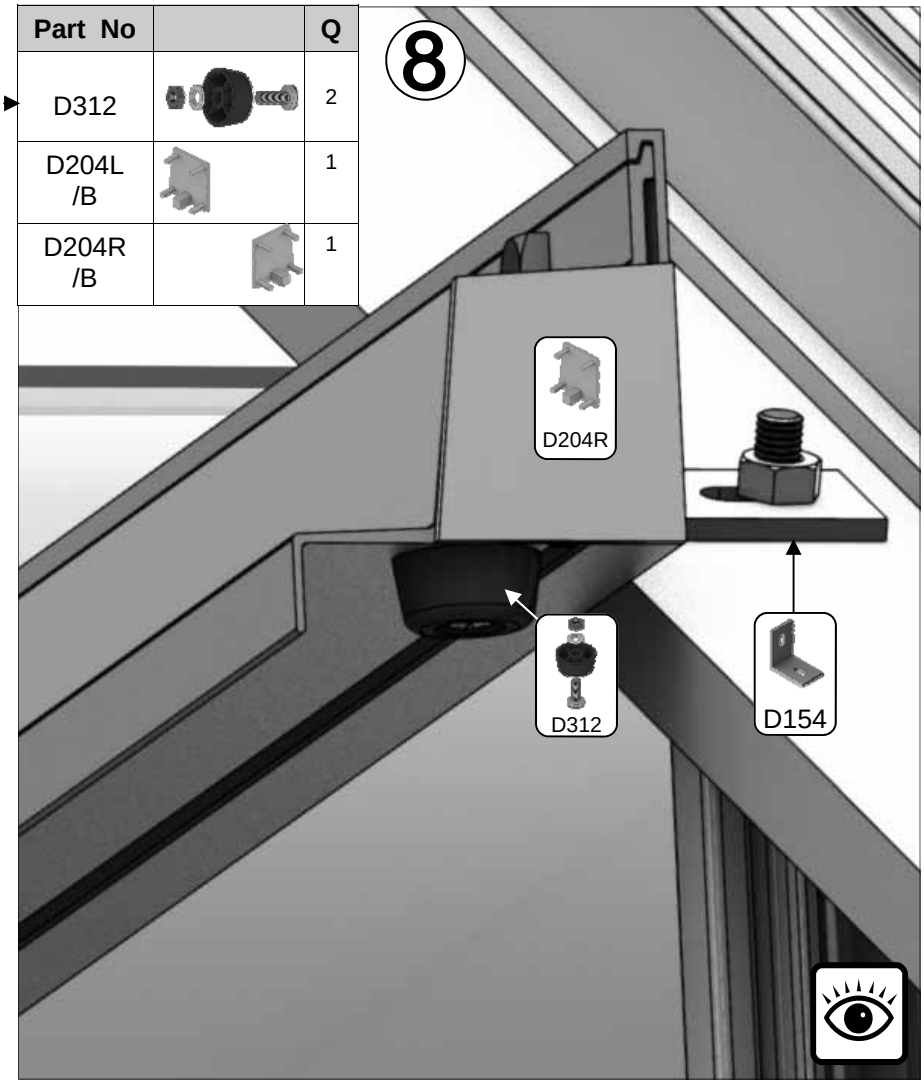

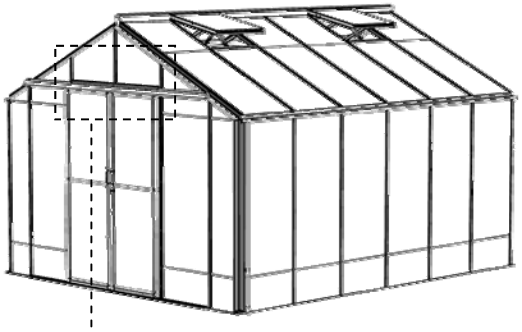

Part No		Q
D054		1
D223/B		1
D819		2
D823		1
D846		2
D833		1

9

	10	2
	N/A	2

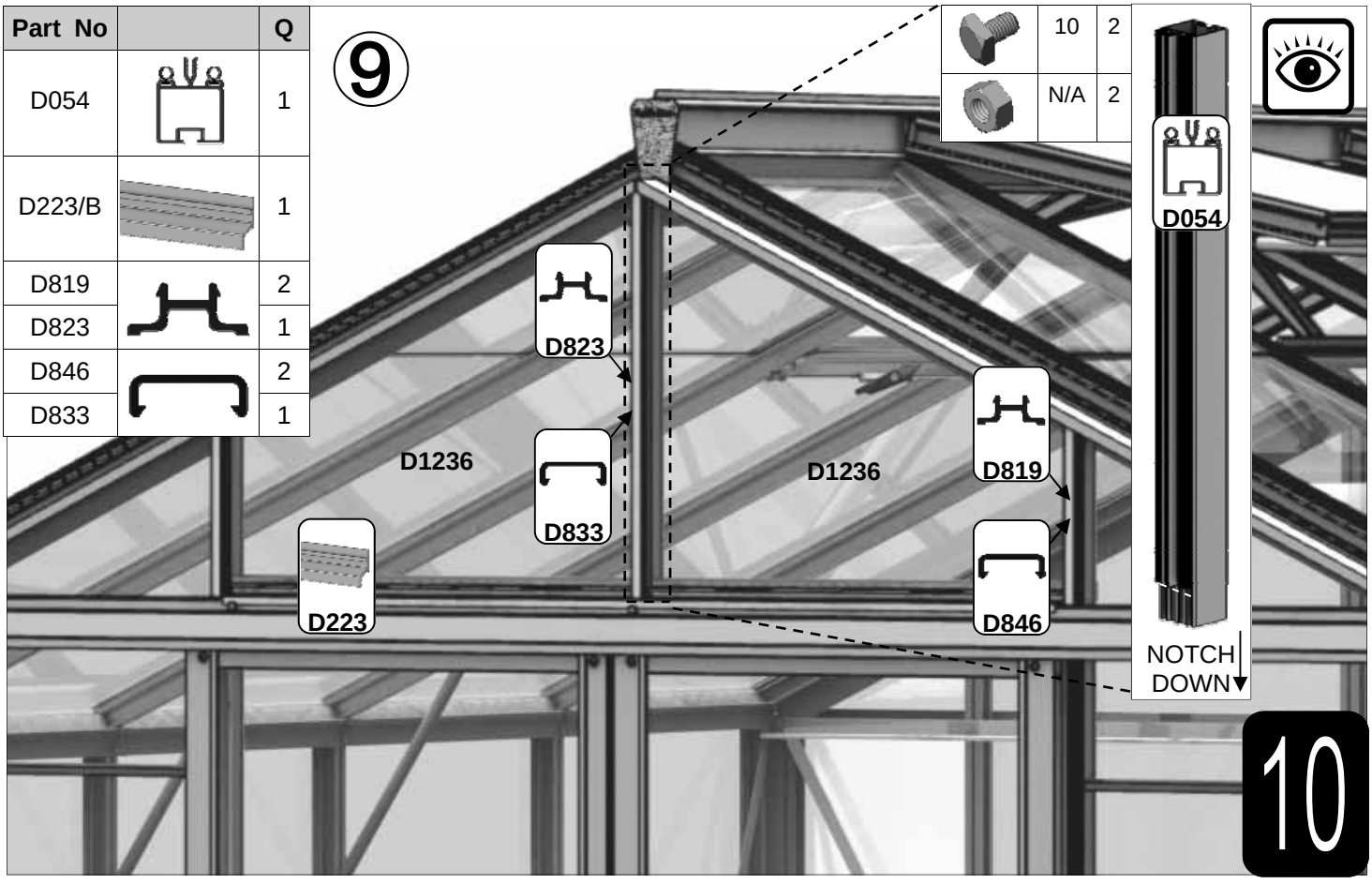

10

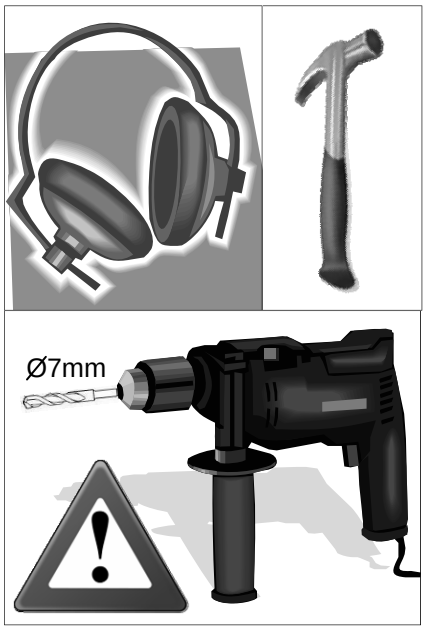

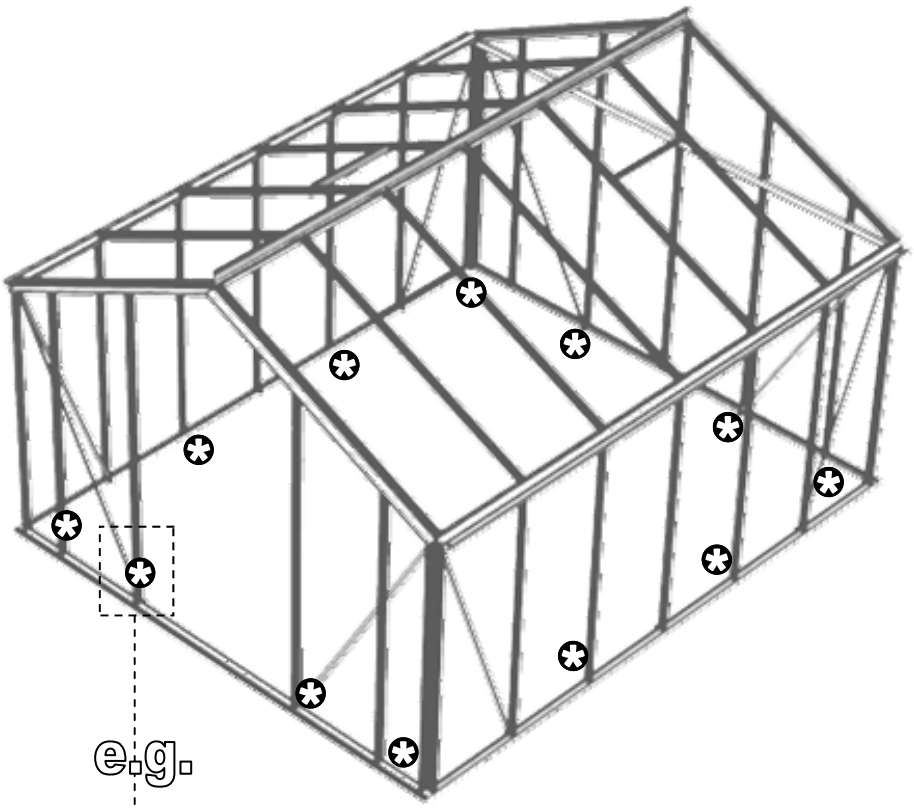

e.g.

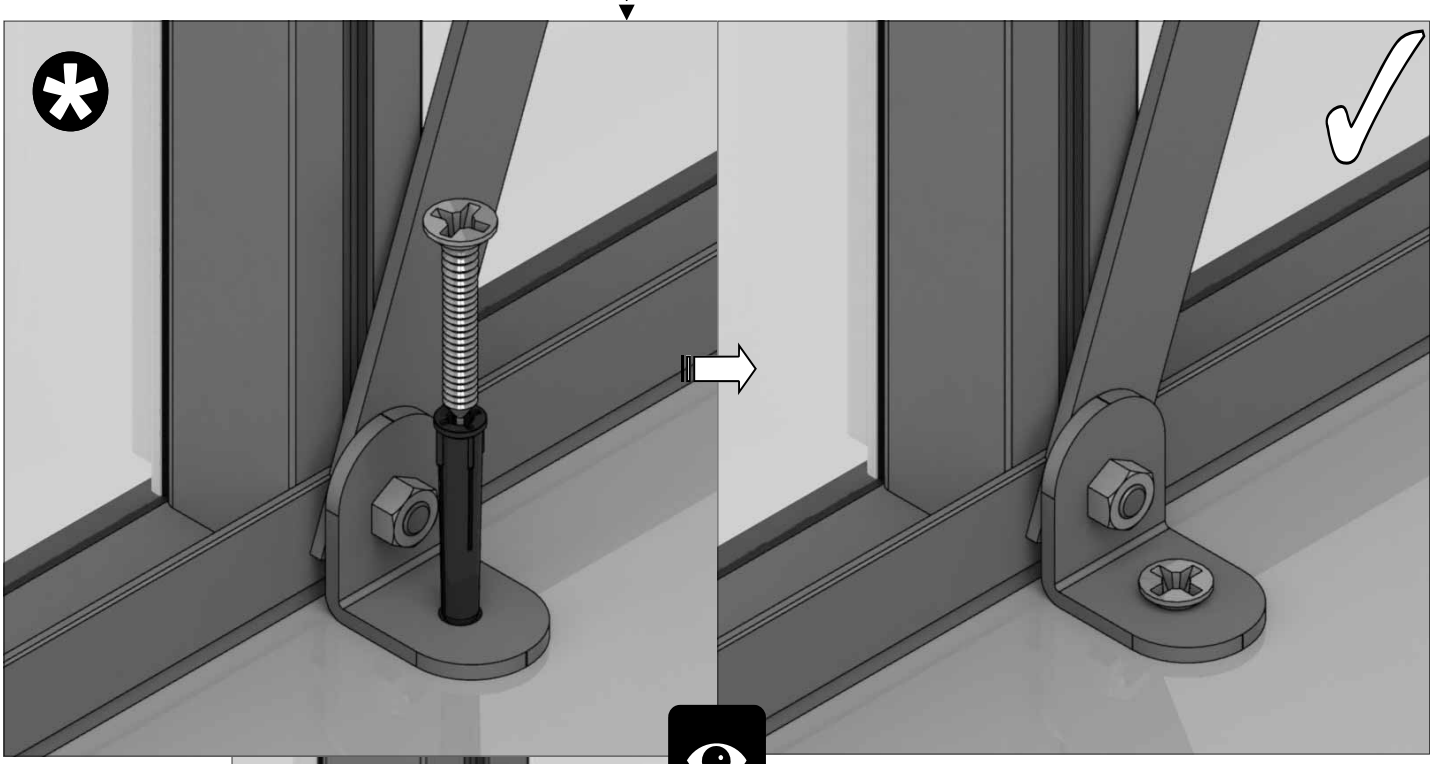

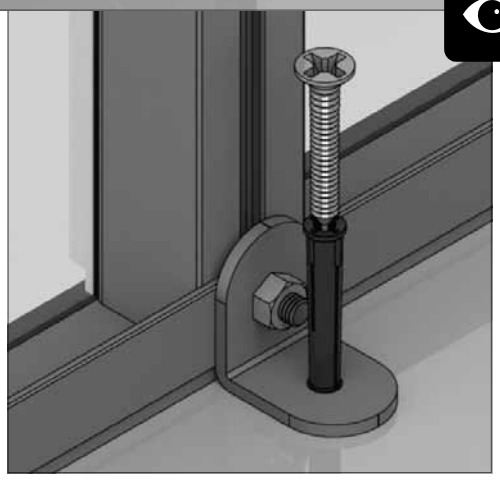

11

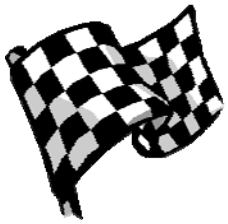

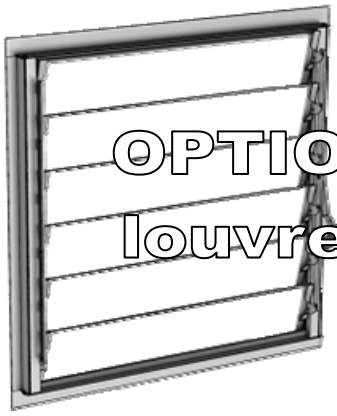

Part No		mm	Quantity
D168L		552	1
D168R (handle)		552	1
D165		612	2
D166		552	2
FS6013		12	4

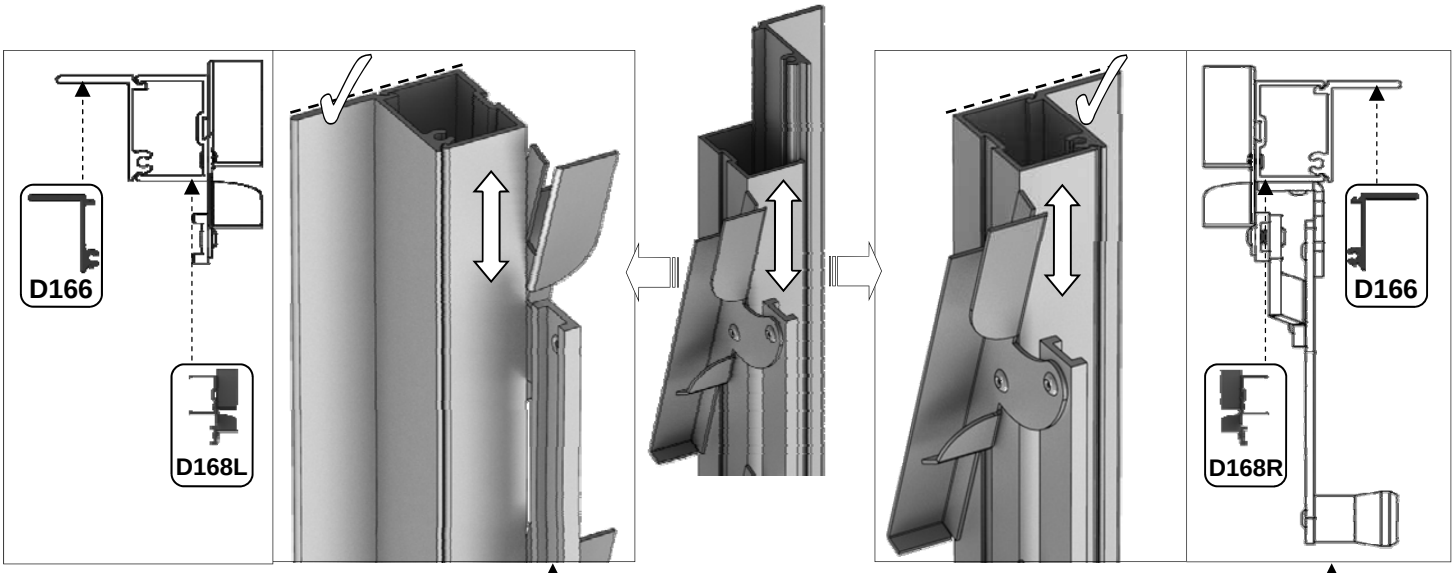

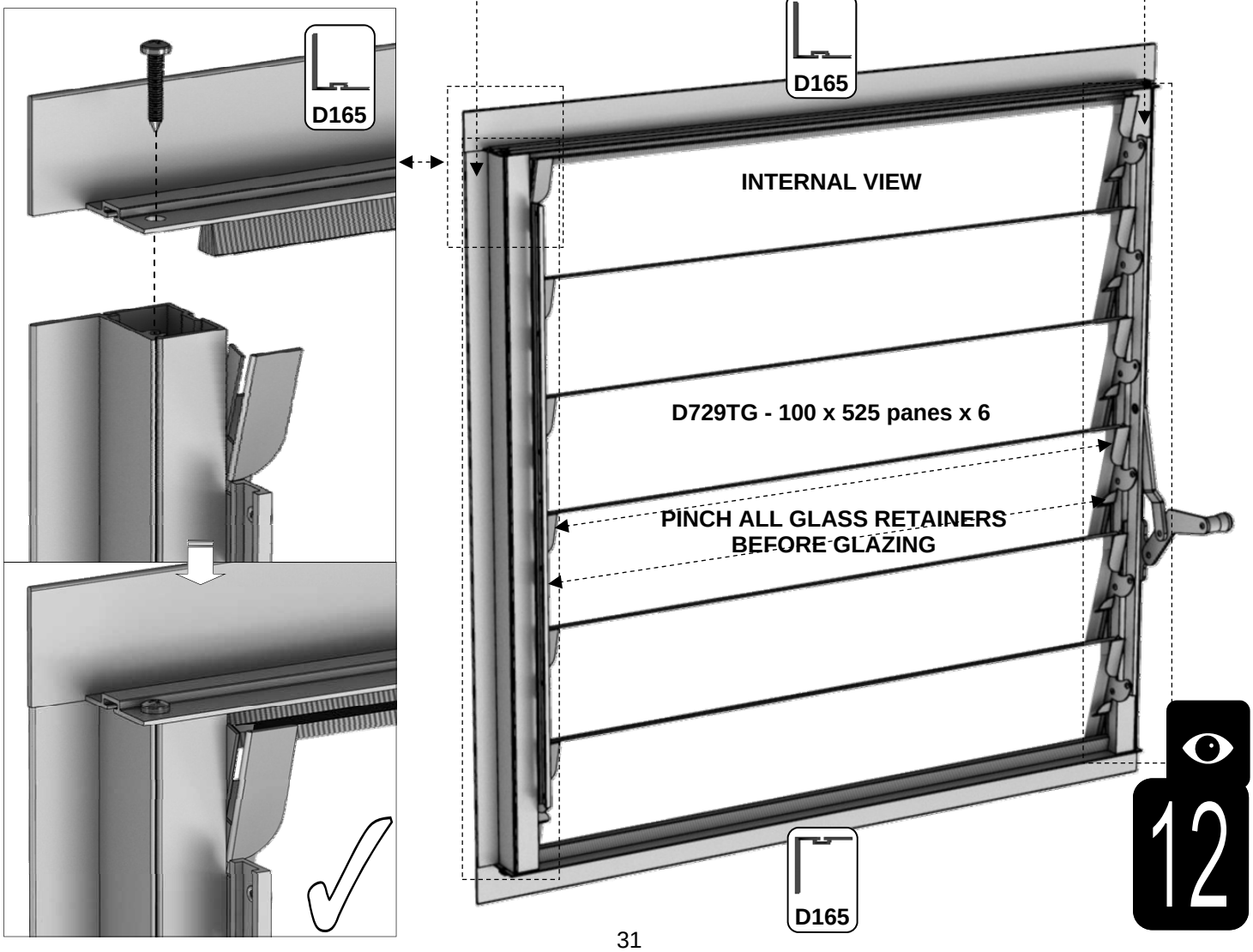

12

Example: 2x 4' 3 slat shelves 'ST0304' = 8' run

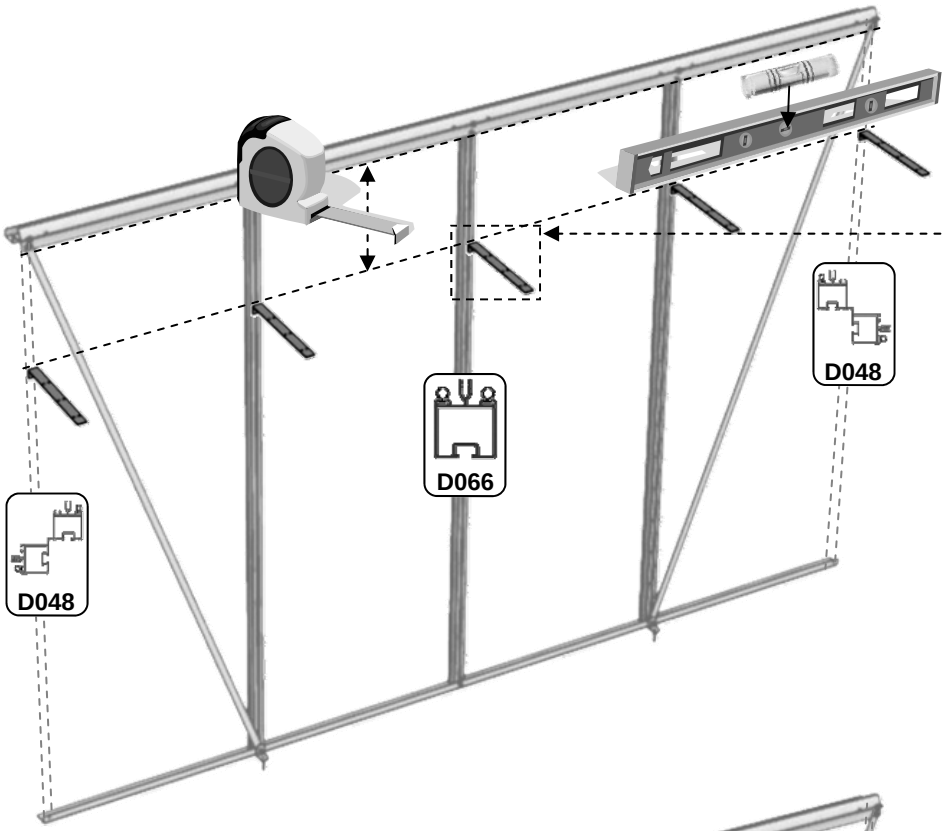

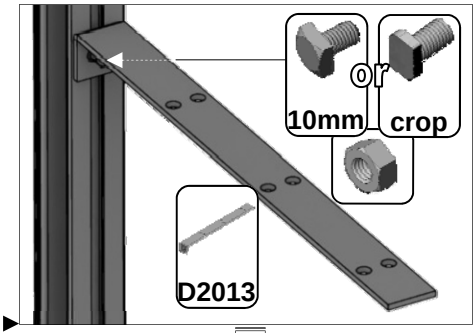

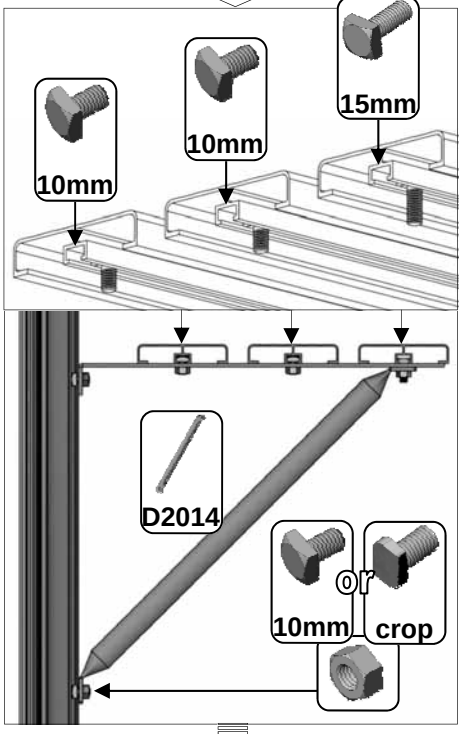

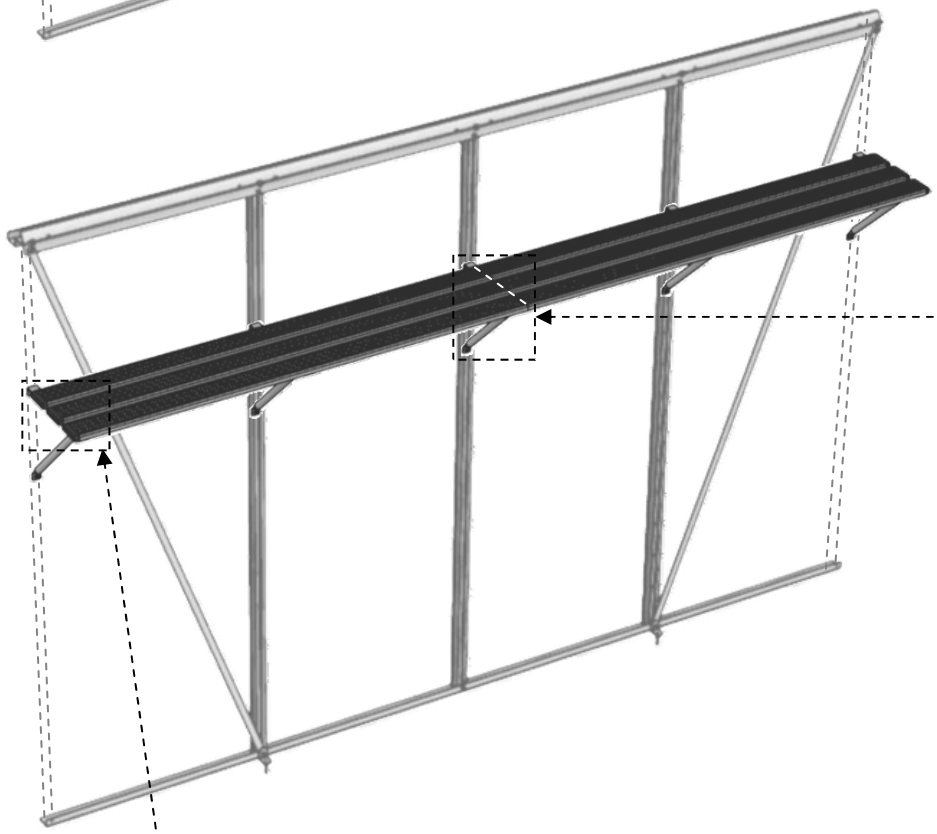

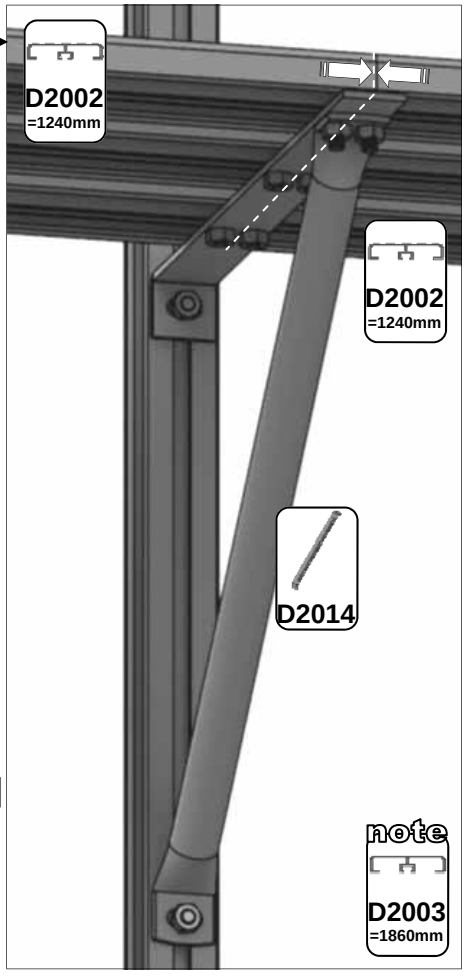

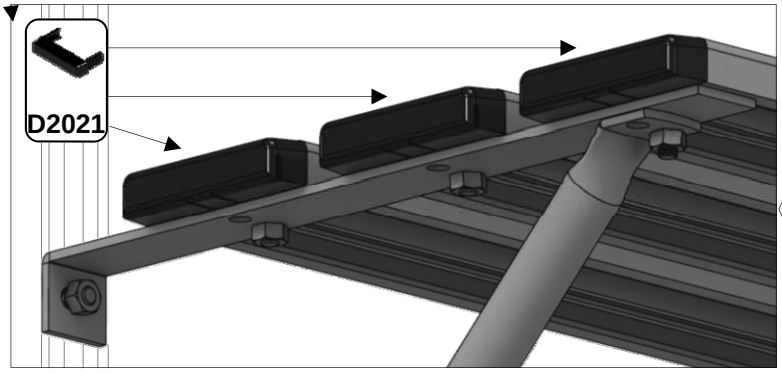

13

Example: 2x 4' 7 slat staging 'ST0704' = 8' run

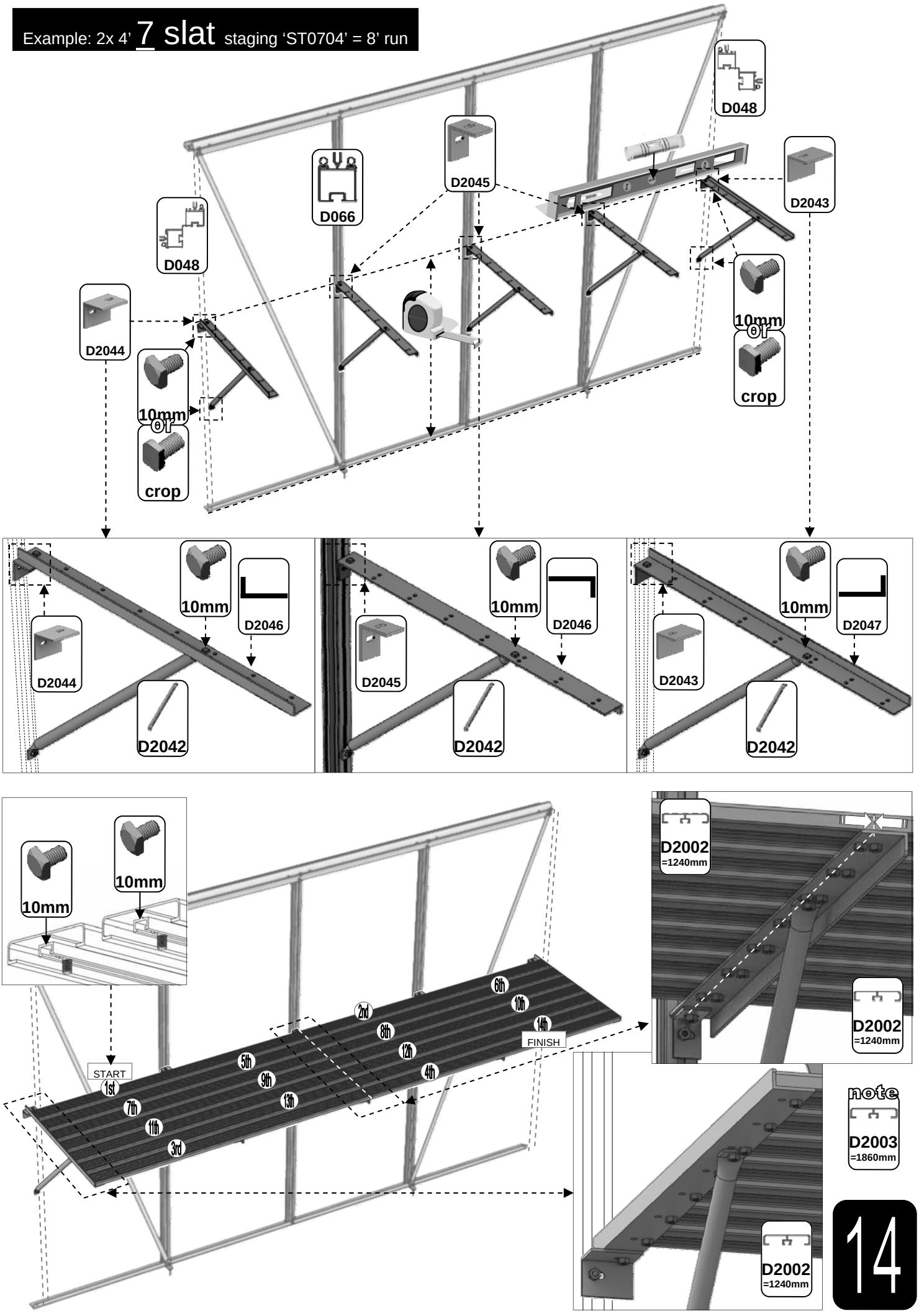

14

Example: 2x 4' 10 slat staging 'ST01004' = 8' run

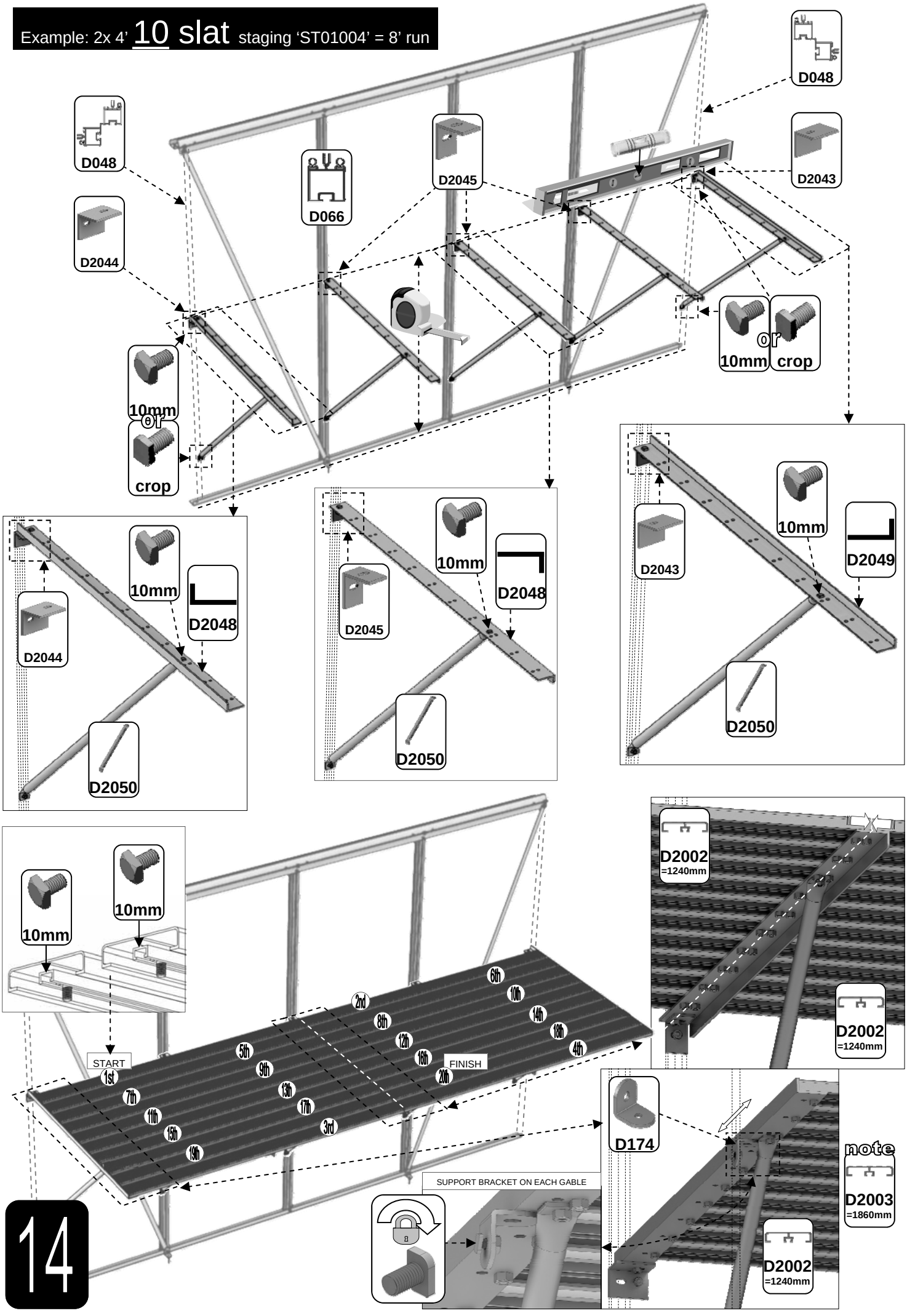

14

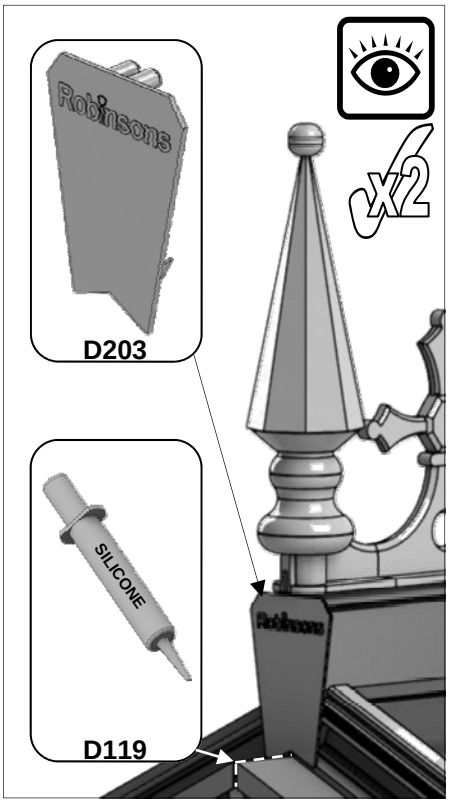
x2
D203
SILICONE
D119

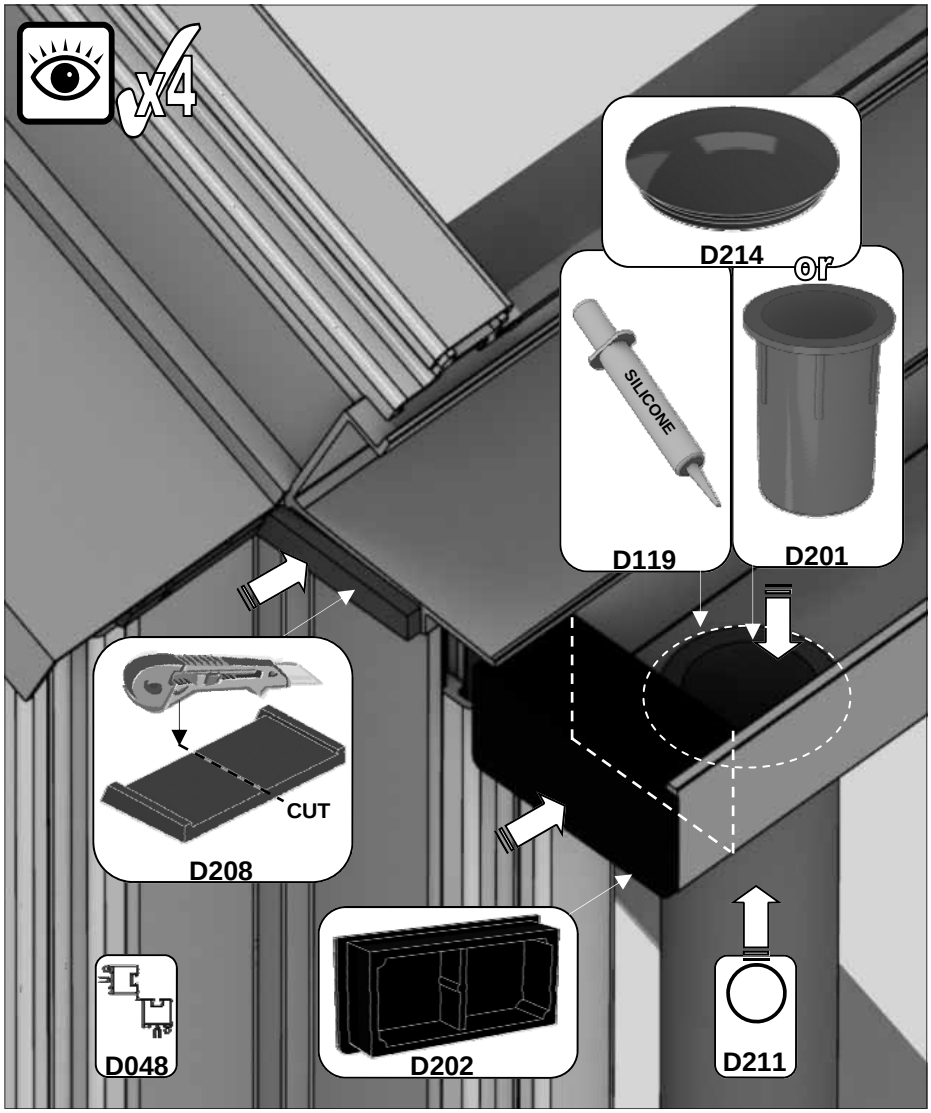
x4
D214
or
SILICONE
D119
D201
CUT
D208
D048
D202
D211

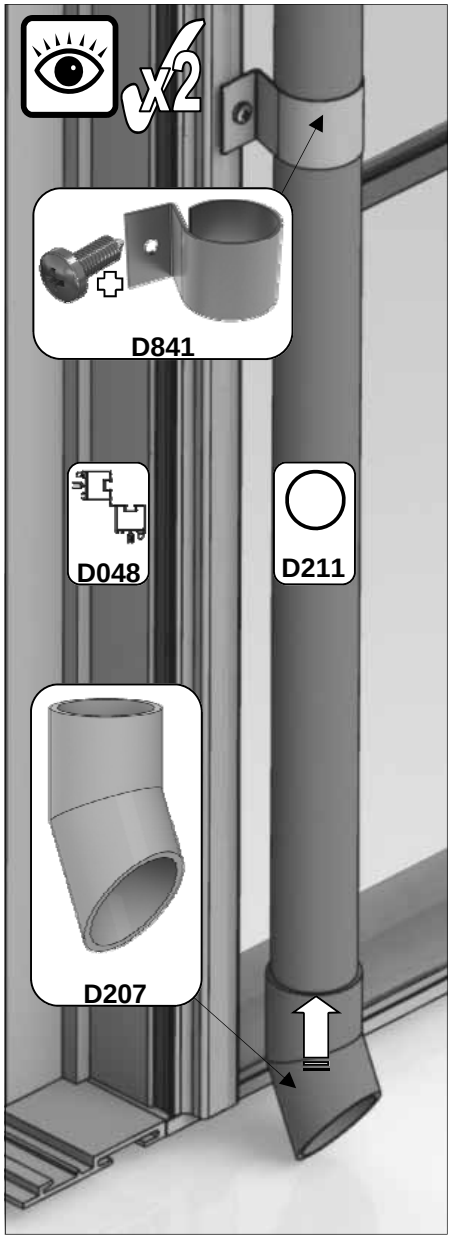
x2
D841
D048
D211
D207

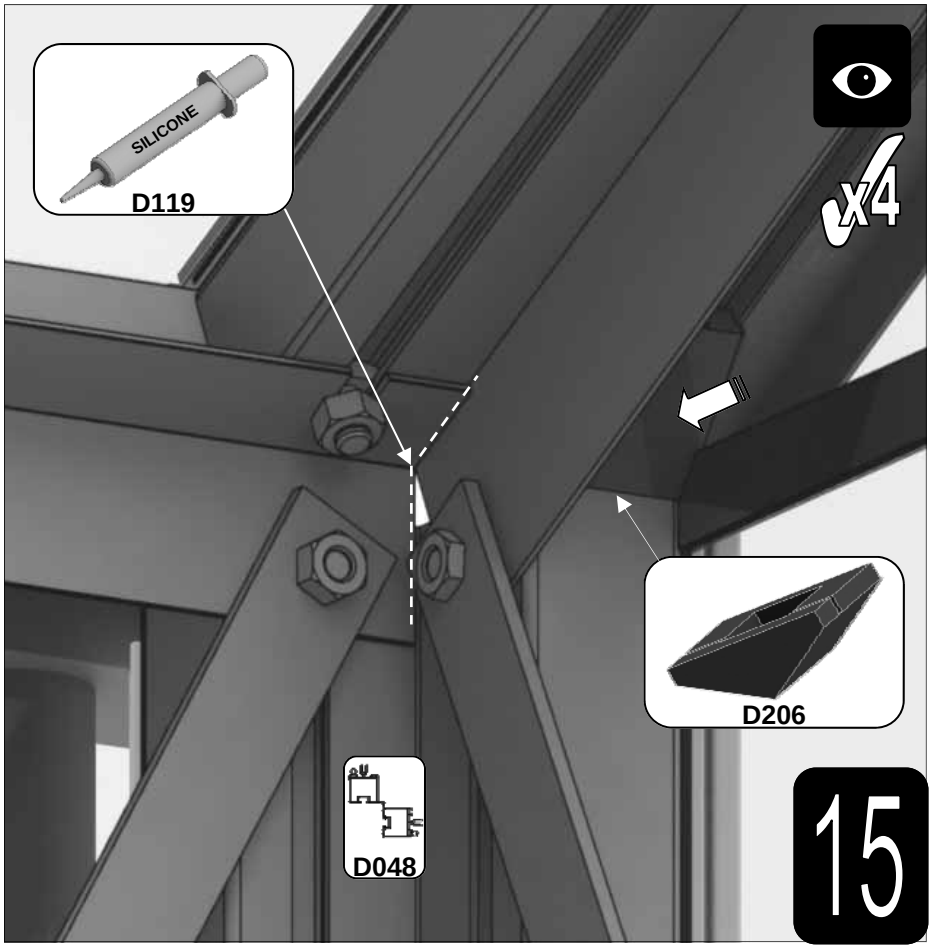
SILICONE
D119
x4
D206
D048
15

OPTIONAL cresting = {

- End finials need to be pinched onto ridge using ‘DV282’ grub screws.
- Depending on your ridge length a half cresting may need to be cut or/ and some spacer bar ‘DV281’ cut into two equal sections.
- Each finial and cresting piece needs to be siliconed ‘D119’ into place.

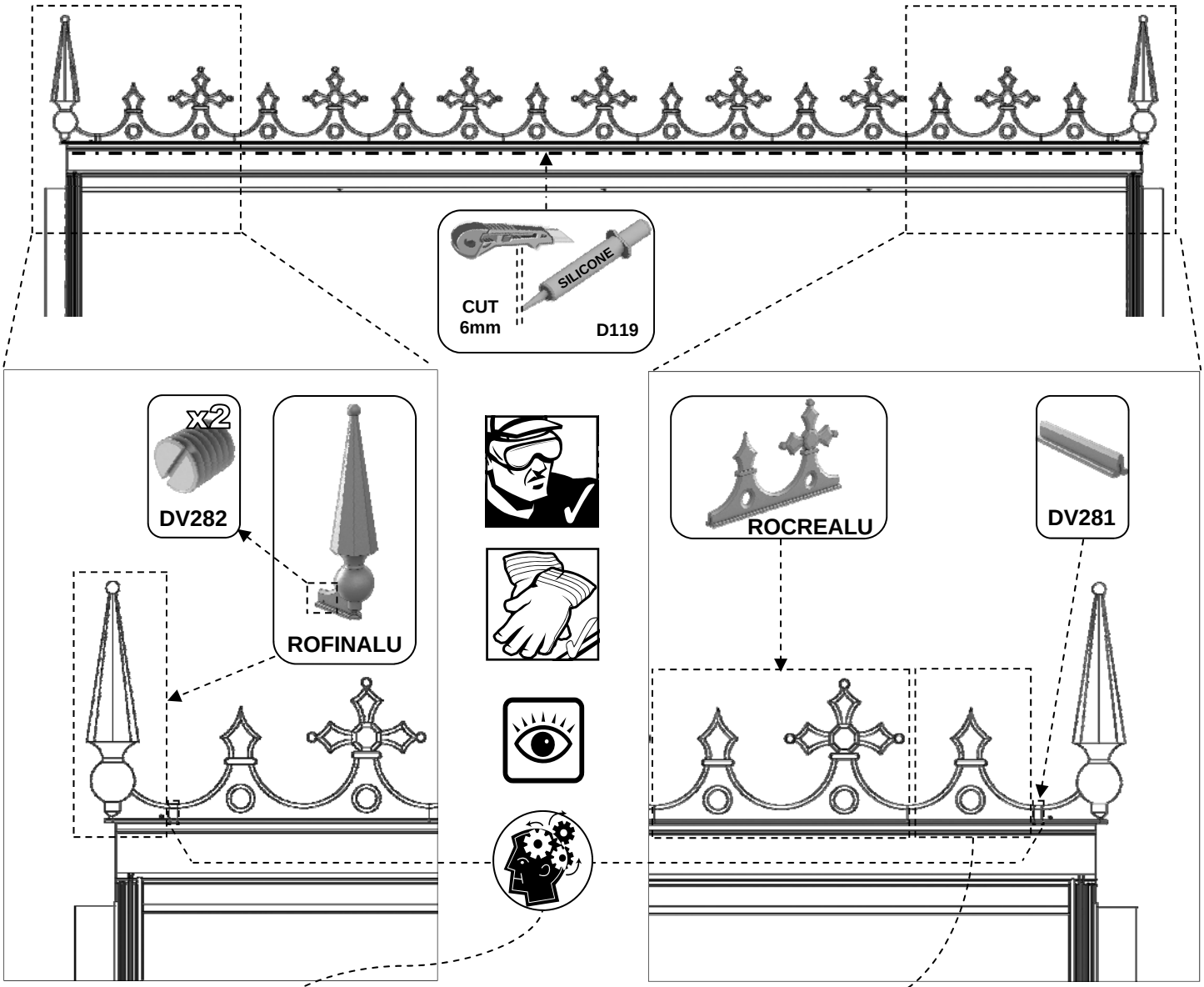

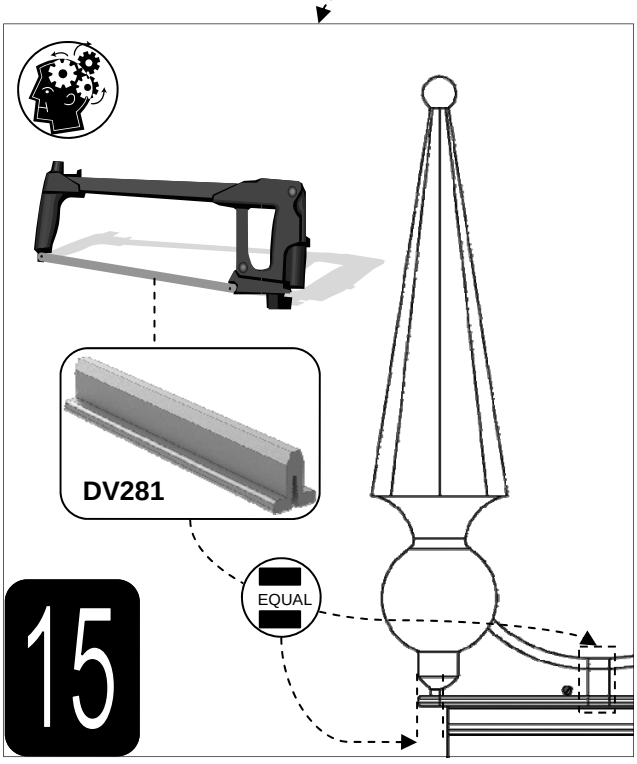

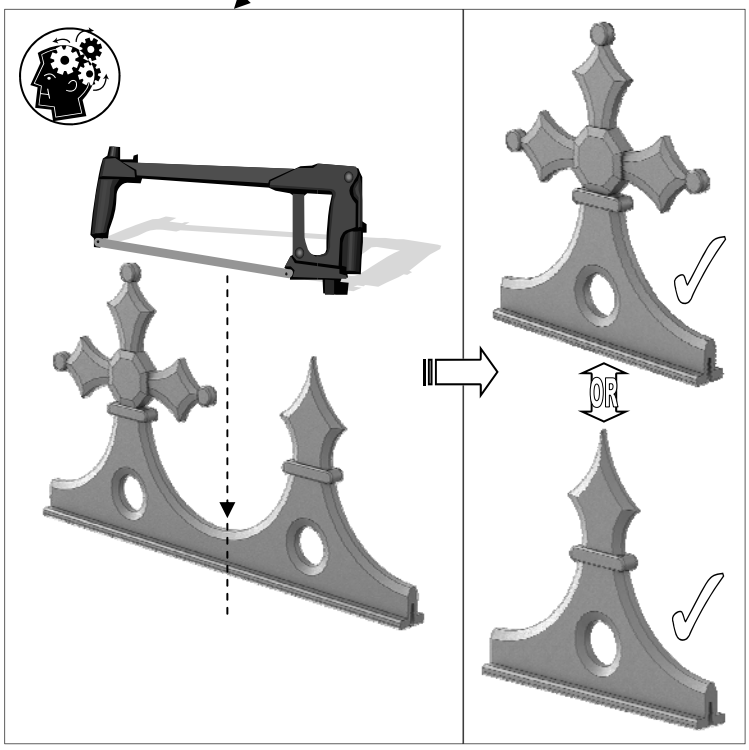

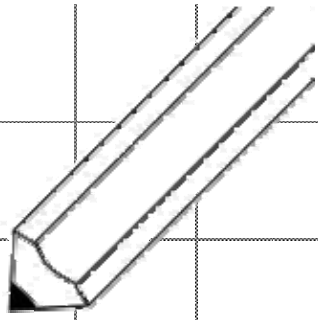

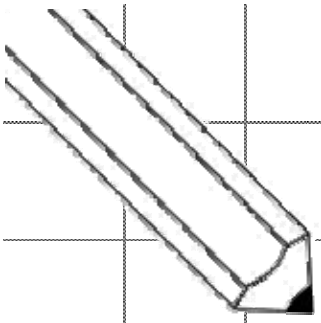

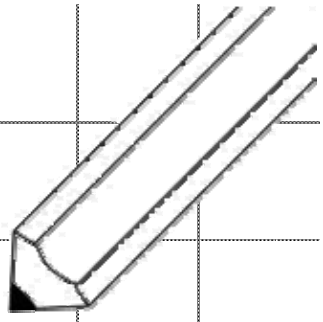

Please be aware that this is a multi-national manual, if you spot any errors or have any constructive comments regarding the manual please email james.spooner@greenhousepeople.co.uk and I will make the necessary amendments. Whilst the information contained in this booklet is accurate at the time of publication, changes in the course of Robinsons policy of improvement through development and design might not be indicated. We point out this fact to avoid any infringements of the Trade Descriptions Act and also to advise that Robinsons Greenhouses reserve the right to change specifications and materials without prior notice.

In addition any photographs of completed buildings would be most appreciated to add to our portfolio.

THIS GREENHOUSE BOX WAS PACKED BY: DATE:_____

_____

Robinsons
ALUMINIUM GREENHOUSES

www.robinsonsgreenhouses.co.uk

To contact Robinsons Customer Services email us at sales@robinsonsgreenhouses.co.uk or call us on 01782 385 409.

Our address is Robinsons Greenhouses, Unit 19 Blythe Park, Cresswell, Stoke-on-Trent, Staffordshire, ST11 9RD